megaspin 420

The megaspin 420 is designed to be fast, accurate, and easy to work with. With the complete new chassis of this machine, the work space is significantly more accessible than on conventional balancing machines. This balancer is perfect for shops where speed and efficiency count the most.

Features

- The World's first balancer with No Checkspin Technology! 2 Laser points guarantee perfect positioning eliminating the need for the traditional 'checkspin'
- 10" to 30" rim diameter capability
- Stealth Display provides super stand-out imbalance display using 'DayWhite' LED's
- Automatic Data Entry via Touchless Sonar
- LED to "Light Up" area for adhesive weight placement
- Absolutely no need for button pressing when conventionally balancing wheels, only advanced functions require any interaction with key panel

HM-10420

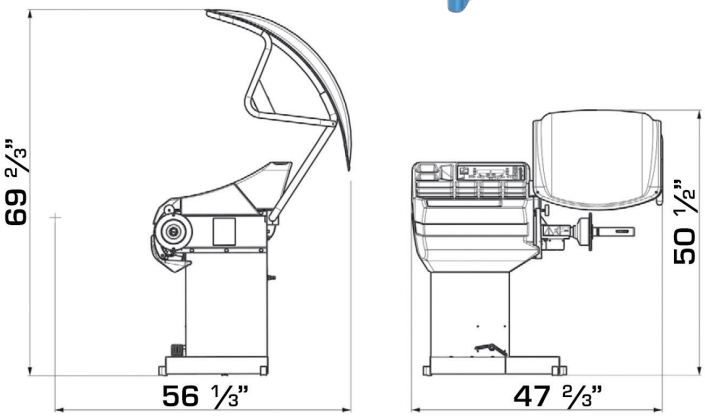

Specifications

Rim Width	1.5" to 20"
Rim Diameter	10" to 30"
Max Wheel Width	20"
Max Tire Diameter	40"
Max Assembly Weight	165 lbs
Speed (RPM)	100 rpm
Voltage	110V
Weight	298 lbs
Packaged Dimensions	44.5" x 57" x 45.25"

HOFMANN MEGAPLAN