IMPORTANT SAFETY INSTRUCTIONS
SAVE THESE INSTRUCTIONS

⚠WARNING

PLEASE READ THE ENTIRE CONTENTS OF THIS MANUAL PRIOR TO INSTALLATION AND OPERATION. BY PROCEEDING WITH JACK INSTALLATION AND OPERATION YOU AGREE THAT YOU FULLY UNDERSTAND AND COMPREHEND THE FULL CONTENTS OF THIS MANUAL. FORWARD THIS MANUAL TO ALL OPERATORS. FAILURE TO OPERATE THIS EQUIPMENT AS DIRECTED MAY CAUSE INJURY OR DEATH.

MAN REV D 07-22-2015
P/N 5900395

INSTALLATION AND OPERATION MANUAL

3,500 / 5,000 POUND CAPACITY QUICKJACK

MODELS:

BL-3500 **VER B**
BL-5000 **VER B**
BL-5000XL **VER B**

RECEIVING

The shipment should be thoroughly inspected as soon as it is received. The signed Bill of Lading is acknowledgement by the shipping carrier as receipt of this product as listed in your invoice as being in a good condition of shipment. If any of these goods listed on this Bill of Lading are missing or damaged, do not accept goods until the shipping carrier makes a notation on the freight bill of the missing or damaged goods. Do this for your own protection.

BE SAFE

Your new jack was designed and built with safety in mind. However, your overall safety can be increased with proper training and thoughtful operation on the part of the operator. **DO NOT** operate or repair this equipment without reading this manual and the important safety instructions shown inside. Keep this operation manual near the jack at all times. Make sure that ALL USERS read and understand this manual.

QUICKJACK™
By Ranger Products

1645 Lemonwood Dr.
Santa Paula, CA. 93060, USA
Toll Free 1-888-262-3880
Tel: 1-805-421-5114
www.quickjack.com

PATENTED. ALL RIGHTS RESERVED

CAR JACK SUPPORT SYSTEM

This instruction manual has been prepared especially for you.
Your new jack is the product of over 40 years of continuous research, testing and development;
it is the most technically advanced vehicle jack on the market today.

READ THIS ENTIRE MANUAL BEFORE INSTALLATION & OPERATION BEGINS

The manner in which you care for and maintain your QuickJack™ will have a direct effect on its overall performance and longevity.

RECORD HERE THE FOLLOWING INFORMATION WHICH IS LOCATED AT THE FRONT END OF YOUR MACHINE.

Model No.	
Serial No.	
Date of Mfg.	

PRODUCT WARRANTY

Our comprehensive warranty means more than a commitment to you; it's also a commitment to the value of your new Ranger Product. For full warranty details and to register your new jack contact your nearest Ranger Products dealer or visit:

www.quickjack.com
En Español: www.quickjack.com.mx

Your new QuickJack™ is covered under warranty for one year on equipment structure; one year on all operating components and tooling/accessories, to the original purchaser, to be free of defects in material and workmanship. The manufacturer shall repair or replace at their option for this period those parts returned to the factory freight prepaid which prove upon inspection to be defective. The manufacturer will pay labor costs for the first 12 months only on parts returned as previously described.

The warranty does not extend to...

- Defects caused by ordinary wear, abuse, misuse, negligence, shipping damage, improper installation, voltage or lack of required maintenance;
- Damages resulting from purchaser's neglect or failure to operate products in accordance with instructions provided in the owner's manual(s) and/or other accompanying instructions supplied;
- Normal wear items or service normally required to maintain the product in a safe operating condition;
- Any component damaged in shipment;
- Other items not listed but may be considered general wear parts;
- Damage caused by rain, excessive humidity, corrosive environments or other contaminants.

THESE WARRANTIES DO NOT EXTEND TO ANY COSMETIC DEFECT NOT INTERFERING WITH EQUIPMENT FUNCTIONALITY OR ANY INCIDENTAL, INDIRECT, OR CONSEQUENTIAL LOSS, DAMAGE OR EXPENSE THAT MAY RESULT FROM ANY DEFECT, FAILURE OR MALFUNCTION OF A BENDPAK INC. / RANGER PRODUCT OR THE BREACH OR DELAY IN PERFORMANCE OF THE WARRANTY.

NOTE:

Every effort has been taken to ensure complete and accurate instructions have been included in this manual, however, possible product updates, revisions and or changes may have occurred since this printing. Quickjack™ reserves the right to change specifications without incurring any obligation for equipment previously or subsequently sold.

TABLE OF CONTENTS

Product Warranty 2
Specifications BL-3500 / BL-5000 / BL-5000XL . . . . . 3 - 4
Definitions of Hazard Levels 5
Important Safety Instructions 6
Parts Inventory / Specifications . . . . . 7 - 8
Tools Required / Getting Started 9
Selecting Site / Floor Requirements 9
Unpacking / Installing Cylinder Fittings 9
Installing Cylinder Fittings (Cont'd) / Installing Inflation Valves 10
Pressurizing Air Bottle Cylinders / Power Unit Assembly 11
Power Unit Assembly (Cont'd) 12
Filling Power Unit Reservoir / Preparing Hoses 13
Preparing Hoses (Cont'd) 14
Jack Preparation. . . . . 15 - 16
Bleeding the Cylinders 16
Bleeding the Cylinders (Cont'd) / Operation and Use 17
Typical Jacking Points / To Raise Jack Frames. 18
To Raise Jack Frames (Cont'd) / To Lower Jack Frames . . . . . 18 - 20
Important Operating / Maintenance Instructions . . . . . 21 - 22
SUV and Light Truck Adapter Kit 23
Parts Breakdowns . . . . . 24 - 31

SPECIFICATIONS

QUICKJACK™ By Ranger Products

BL-3500 **BL-5000**

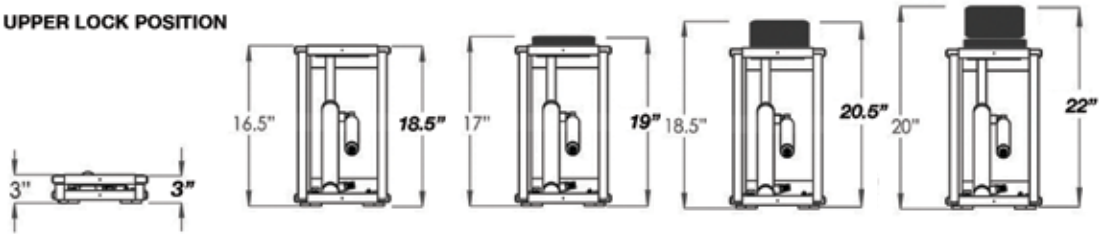

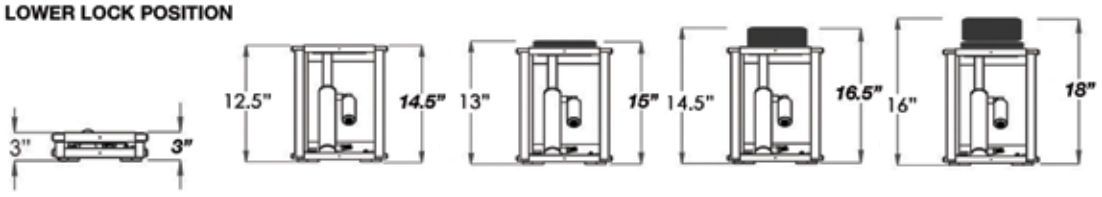

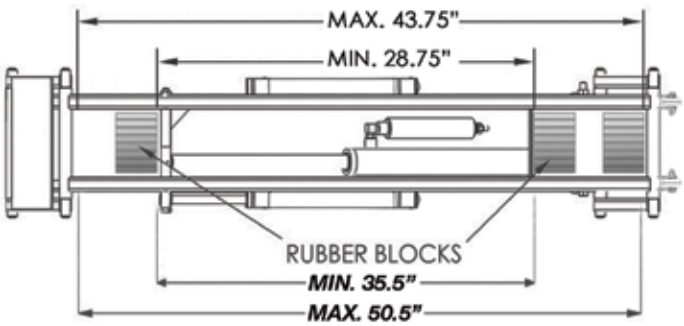

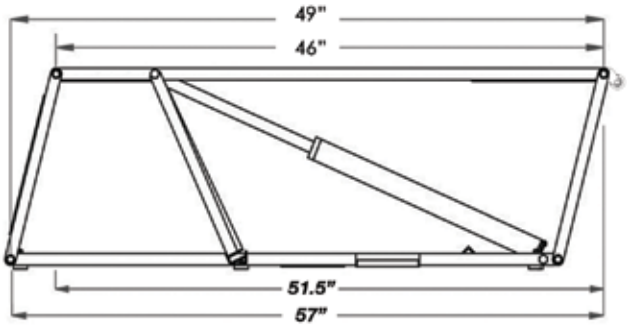

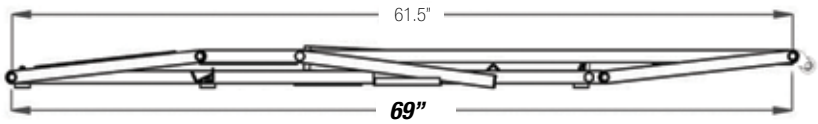

BL-3500
BL-5000

QUICKJACK™ By Ranger Products

BL-5000XL

UPPER LOCK POSITION

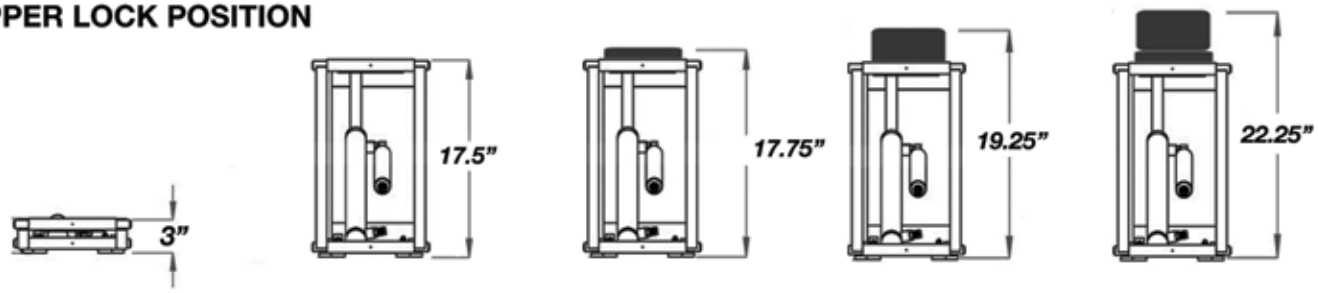

LOWER LOCK POSITION

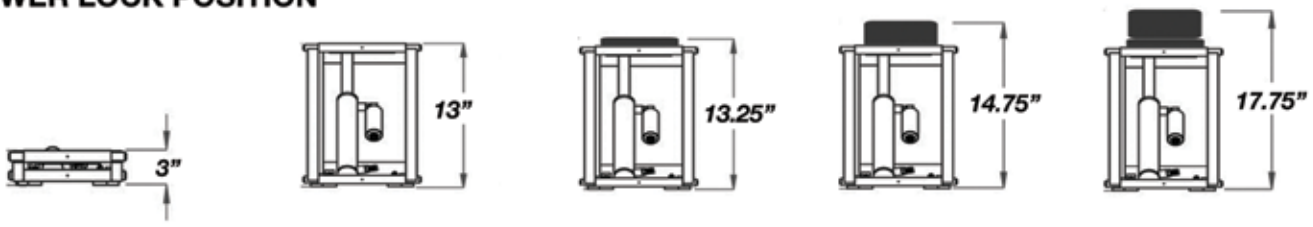

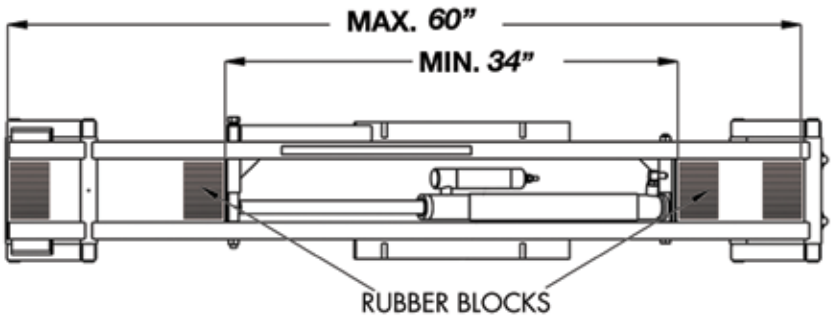

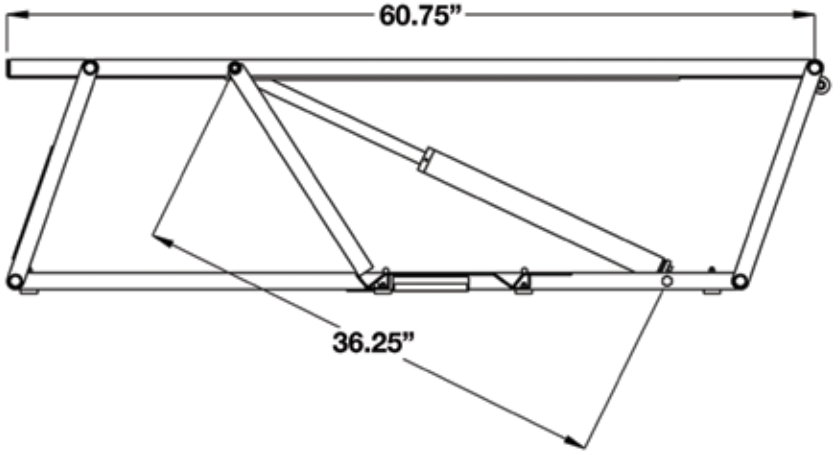

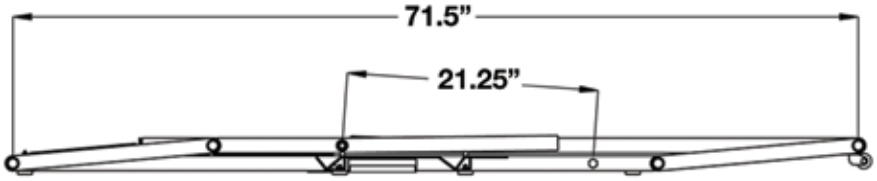

IMPORTANT NOTICE

Stay clear of any moving parts that can fall and cause injury. These instructions must be followed to insure proper installation and operation of your jack. Failure to comply with these instructions can result in serious bodily harm and void product warranty. Manufacturer will assume no liability for loss or damage of any kind, expressed or implied resulting from improper installation or use of this product.

DEFINITIONS OF HAZARD LEVELS

Identify the hazard levels used in this manual with the following definitions and signal words:

Watch for this symbol as it means: Immediate hazards which will result in severe personal injury or death.

Watch for this symbol as it means: Hazards or unsafe practices which could result in severe personal injury or death.

Watch for this symbol as it means: Hazards or unsafe practices which may result in minor personal injury, product or property damage.

OWNER'S RESPONSIBILITY

To maintain the jack and user safety, the responsibility of the owner is to read and understand these instructions:

- Follow all installation and operation instructions.
- Make sure installation conforms to all applicable Local, State, and Federal Codes, Rules, and Regulations; such as State and Federal OSHA Regulations and Electrical Codes.
- Carefully check the product for correct initial function.
- Read and follow the safety instructions. Keep them readily available for machine operators.
- Make certain all operators are properly trained, know how to safely and correctly operate the unit, and are properly supervised.
- Allow unit operation only with all parts in place and operating safely.
- Carefully inspect the unit on a regular basis and perform all maintenance as required.
- Service and maintain the unit only with authorized or approved replacement parts.
- Keep all instructions permanently with the unit and all decals on the unit clean and visible.

INSTALLER / OPERATOR PLEASE READ AND FULLY UNDERSTAND. BY PROCEEDING YOU AGREE TO THE FOLLOWING:

- I have visually inspected the site where the jack is to be installed and verified the concrete to be in good condition and free of cracks or other defects. I understand that installing a jack on cracked or defective concrete could cause jack failure resulting in personal injury or death.
- I understand that a level floor is required for proper installation and level lifting.
- I understand that I am responsible if my floor is of questionable slope and that I will be responsible for all charges related to pouring a new level concrete slab if required and any charges.
- I will assume full responsibility for the concrete floor and condition thereof, now or later, where the above equipment model is to be installed. Failure to follow Danger, Warning, and Caution instructions may lead to serious personal injury or death to operator or bystander or damage to property.

BEFORE YOU BEGIN RECEIVING YOUR SHIPMENT

The shipment should be thoroughly inspected as soon as it is received. The signed bill of lading is acknowledgement by the carrier of receipt in good condition of shipment covered by your invoice. If any of the goods called for on the bill of lading are shorted or damaged, do not accept them until the carrier makes a notation on the freight bill of the shorted or damaged goods. NOTIFY THE CARRIER AT ONCE if any hidden loss or damage is discovered after receipt and request the carrier to make an inspection.

IT IS DIFFICULT TO COLLECT FOR LOSS OR DAMAGE AFTER YOU HAVE GIVEN THE CARRIER A CLEAR RECEIPT. File your claim with the carrier promptly. Support your claim with copies of the bill of lading, freight bill, invoice, and photographs, if available.

QUICKJACK™ By Ranger Products

IMPORTANT SAFETY INSTRUCTIONS

IMPORTANT SAFETY INSTRUCTIONS

Read these safety instructions entirely. Do not attempt to install this QuickJack if you have never been trained on basic vehicle jack installation procedures. Never attempt to lift components without proper lifting tools such as forklifts or cranes. Stay clear of any moving parts that may fall and cause injury. When using your garage equipment, basic safety precautions should always be followed, including the following:

1. Read and understand all instructions and all safety warnings before operating jack.

2. Care must be taken as burns can occur from touching hot parts.

3. **DO NOT** operate equipment with a damaged cord or hose or if the equipment has been dropped or damaged until it has been examined by a qualified service person.

4. **DO NOT** let a cord hang over the edge of the table, bench, or counter or come in contact with hot manifolds or moving fan blades.

5. Care should be taken to arrange the cord and hose so that it will not be tripped over or pulled.

6. Adequate ventilation should be provided when working on operating internal combustion engines.

7. Keep hair, loose clothing, fingers, and all parts of body away from moving parts. Keep feet clear of jack when lowering. Avoid pinch points.

8. Use only as described in this operation manual. Use only manufacturer's recommended attachments.

9. **ALWAYS WEAR SAFETY GLASSES**. Everyday eyeglasses only have impact resistant lenses, they are not safety glasses.

10. Consider work environment. Keep work area clean. Cluttered work areas invite injuries. Keep areas well lit.

11. Only trained operators should operate this jack. All non-trained personnel should be kept away from the work area. Never let non-trained personnel come in contact with, or operate jack.

12. Clear area if vehicle is in danger of falling.

13. **ALWAYS** make sure the safeties are engaged before attempting to work on or near a vehicle.

14. **MAINTAIN WITH CARE**. Keep jack clean for better and safer performance. Follow manual for proper lubrication and maintenance instructions. Keep control handles and/or buttons dry, clean and free from grease and oil.

15. Check for damaged parts. Check for alignment of moving parts, breakage of parts or any condition that may affect operation of jack. Do not use jack if any component is broken or damaged.

16. **NEVER** remove safety related components from the jack. Do not use jack if safety related components are missing or damaged.

17. **STAY ALERT**. Use common sense and watch what you are doing. Remember, **SAFETY FIRST**.

SAVE THESE INSTRUCTIONS IN AN ACCESSIBLE LOCATION

BL-3500 & BL-5000 PARTS INVENTORY

Be sure to take a complete inventory of parts prior to beginning installation.

DESCRIPTION	QTY
Frame Assemblies	2
Power Unit with Carrier	1
Quick Connect Twin Hose Assembly	1
Quick Connect Hoses	2
Rubber Lift Blocks	8
Frame Handles	2
Parts Box (Packing List Enclosed)	1

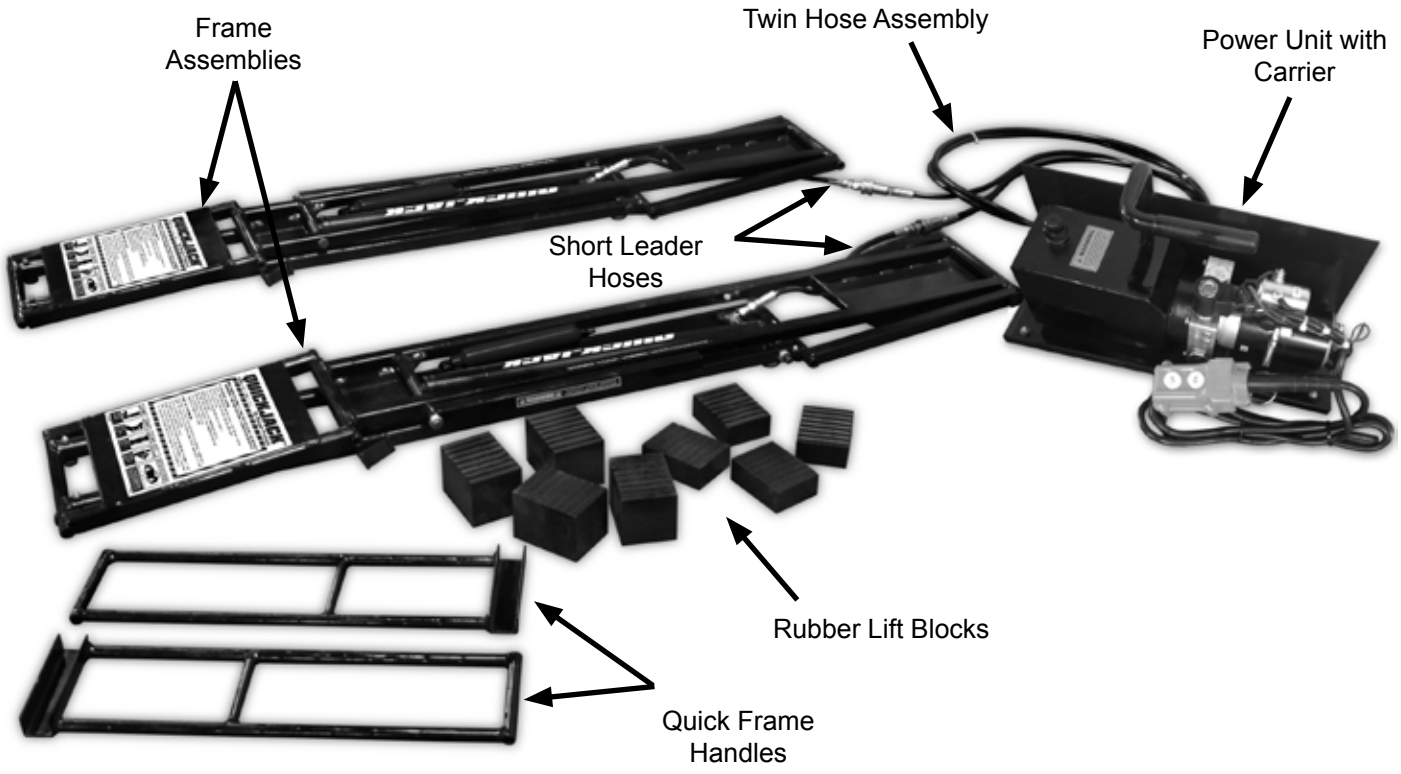

SPECIFICATIONS

MODEL	BL-3500	BL-5000
Lifting Capacity per Pair	3,500 Lbs. / 1588 Kg.	5,000 Lbs. / 2268 Kg.
Frame Length (Overall):	61.5" / 1562 mm.	69" / 1753mm
Frame Width:	10.5" / 267 mm.	11.25" / 286 mm.
Rubber Lift Block Position Min.:	28.75" / 730 mm.	35.5" / 902 mm.
Rubber Lift Block Position Max.:	43.75" / 1111 mm.	50.5" / 1283 mm.
Platform Lifting Height (Frame Only):	16.75” / 425 mm.	18.5” / 470 mm.
Platform Lifting Height (with Rubber Lift Blocks):	20” / 508 mm.	22” / 559 mm.
Minimum Collapsed Height:	3” / 76 mm.	3” / 76 mm.
Standard Motor(*)	110VAC / 60 Hz 1Ph	110VAC / 60 Hz 1Ph
* Optional 12-Volt DC Motor available.		
The design, material and specifications are subject to change without notice.		

BL-5000XL PARTS INVENTORY

Be sure to take a complete inventory of parts prior to beginning installation.

DESCRIPTION	QTY
Frame Assemblies	2
Power Unit with Carrier	1
Quick Connect Twin Hose Assembly	1
Quick Connect Hoses	2
Rubber Lift Blocks	8
Frame Handles	2
Parts Box (Packing List Enclosed)	1

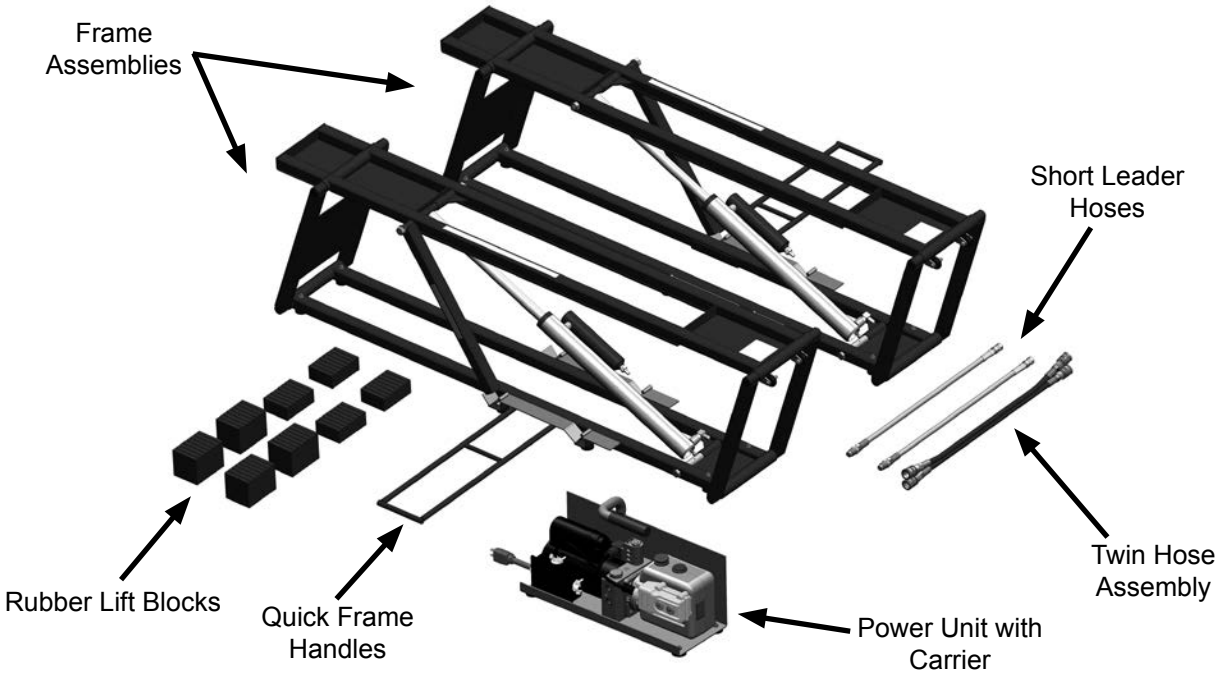

SPECIFICATIONS

MODEL	BL-5000XL
Lifting Capacity per Pair:	5,000 Lbs. / 2268 Kgs.
Frame Length (Overall):	71.5” / 1816 mm.
Frame Width:	11.25” / 286 mm.
Rubber Lift Block Position Min:	34” / 862 mm.
Rubber Lift Block Position Max:	60” / 1523 mm.
Platform Lifting Height (Frame Only):	17.5” / 447 mm.
Platform Lifting Height (w/ Lift Blocks):	21” / 533 mm.
Minimum Collapsed Height:	3” / 76 mm.
Standard Motor(*)	110VAC / 60 Hz 1 Ph
* Optional 12-Volt DC Motor available.	
The design, material and specifications are subject to change without notice.	

TOOLS REQUIRED

- Open-End Wrench Set: SAE/Metric
- Socket And Ratchet Set: SAE/Metric
- Phillips Screwdriver
- Wrench sizes: 7/16”, 3/8”, 5/8”, 11/16” and 3/4”

IMPORTANT NOTICE

THESE INSTRUCTIONS MUST BE FOLLOWED TO ENSURE PROPER INSTALLATION AND OPERATION OF YOUR JACK. FAILURE TO COMPLY WITH THESE INSTRUCTIONS CAN RESULT IN SERIOUS BODILY HARM AND VOID PRODUCT WARRANTY. MANUFACTURER WILL ASSUME NO LIABILITY FOR LOSS OR DAMAGE OF ANY KIND, EXPRESSED OR IMPLIED, RESULTING FROM IMPROPER INSTALLATION OR USE OF THIS PRODUCT.

PLEASE READ ENTIRE MANUAL PRIOR TO INSTALLATION

STEP 1
Selecting Site

Before installing your new jack, check the following:

1. **JACK LOCATION:** Always make sure that adequate space is available for installation. Your new QuickJack is shipped in two boxes. Approximate dimensions are shown below.

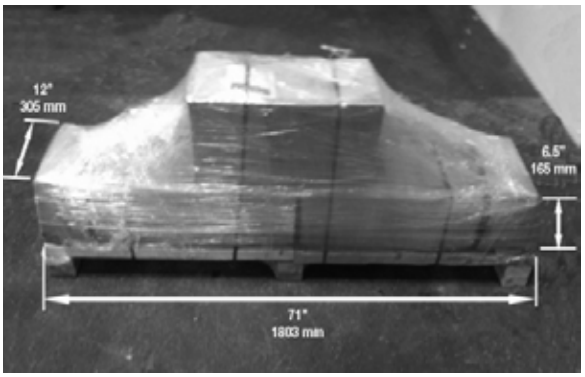

2. **OVERHEAD OBSTRUCTIONS:** The area where the jack will be located should be free of any overhead obstructions such as heaters, building supports, electrical lines etc.

3. **DEFECTIVE FLOOR:** Visually inspect the site where the jack is to be installed and check for defective concrete or asphalt.

STEP 2
Floor Requirements

⚠ CAUTION

FLOOR MUST BE DRY, FLAT, LEVEL AND COMPACT AND HAVE A MINIMUM COMPRESSIVE STRENGTH OF 500 PSI. A LEVEL FLOOR IS REQUIRED FOR PROPER INSTALLATION AND LEVEL LIFTING.

This jack must be installed on a solid level area with no more than 3° of slope. Failure to do so could cause personal injury or death.

STEP 3
Unpacking

1. After choosing the area of installation, open packaging and remove the frames, handles, hoses and power unit.

2. Place the QuickJack frames near work area.

STEP 4
Installing Cylinder Fittings

1. Remove the shipping plugs from the hydraulic cylinders as shown below.

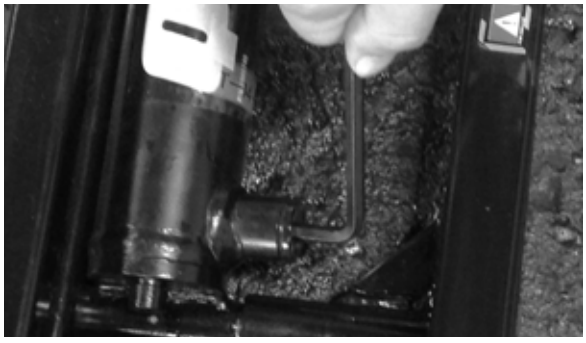

2. Install the 90º O-ring fittings and position the fittings at 10 o'clock.

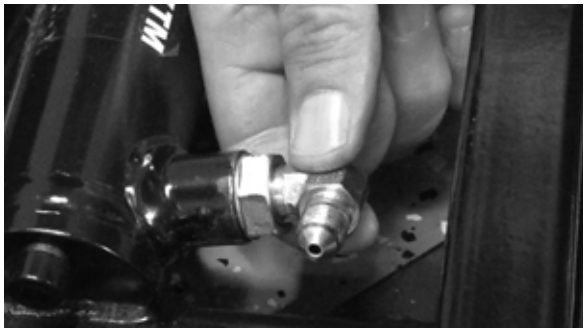

3. Using a wrench, secure the fitting nut.

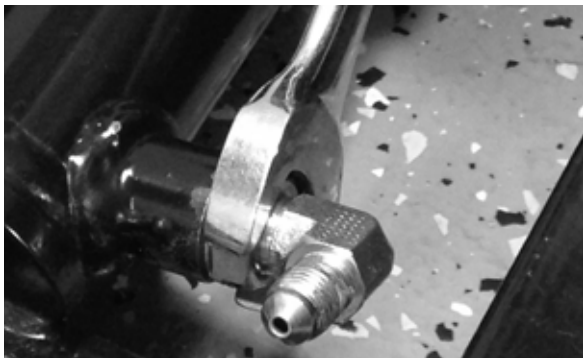

STEP 5
Installing Inflation Valves

Appropriate procedures must be employed for effective assembly of the air inflation valve located on each air bottle cylinder. Installation torque and cleanliness should be addressed when installing.

1. Using a hex key wrench, remove shipping plugs from both air bottle cylinders.

⚠ CAUTION

EXCESS PACKING OIL MAY RELEASE FROM THE AIR BOTTLE CYLINDER. AVOID CONTACT WITH HYDRAULIC FLUIDS. USE PERSONAL PROTECTIVE EQUIPMENT. IF HYDRAULIC FLUID COMES IN CONTACT WITH EYES, GETS INTO THE BLOODSTREAM OR IS SWALLOWED, PLEASE CONSULT A DOCTOR IMMEDIATELY.

2. Wrap the threads on the two air inflation valves with Teflon™ tape. When applying tape, wrap it three times in direction shown below.

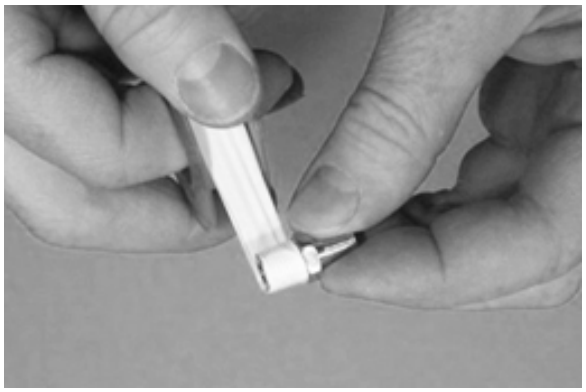

3. Carefully thread each air inflation valve into each air bottle cylinder as shown. NOTE: It is strongly recommended that valve cores be started by hand to minimize cross-threading.

4. Gently tighten each inflation valve.

⚠ DANGER! ⚠

AVOID SERIOUS INJURY OR DEATH FROM EXPLOSION. MAXIMUM PRESSURE ON AIR BOTTLE SHOULD NOT EXCEED 50-PSI WITH JACK FRAMES IN FULLY LOWERED POSITION. LOCK-OUT POWER SOURCE AND BLEED OFF AIR PRESSURE BEFORE SERVICING.

STEP 6
Pressurizing Air Bottle Cylinders

1. IMPORTANT: Make sure lift frames are in the fully lowered position during the following procedures.

2. Remove dust cap from each air inflation valve.

3. If the valve hasn't been opened for a while, use a valve tool to release a short hiss of air to check valve for proper operation and to drain any accumulated oil. Holding the valve open deflates the air bottle cylinder.

4. Using a pump or air compressor, inflate each air bottle cylinder to 50-PSI. Pull the connector off quickly parallel to the valve to minimize air loss.

5. Press the air pressure gauge evenly onto the valve stem and record the reading given. If there is a hissing sound, the gauge is not tight or even enough for an accurate reading. **DO NOT EXCEED 50-PSI.**

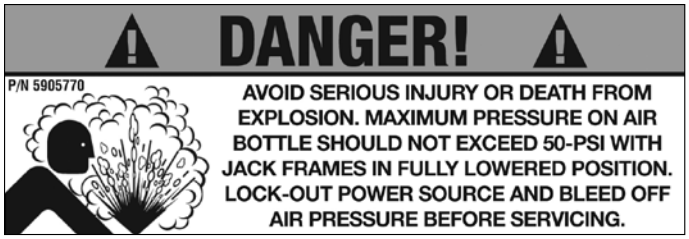

6. Replace dust caps. The dust cap on each inflation valve helps to retain air. If the valve does not have a cap, the air bottle cylinders may deflate noticeably sooner.

STEP 7
Power Unit Assembly

1. **IMPORTANT:** Mount the Power Unit to carrier using round spacers and bolts.

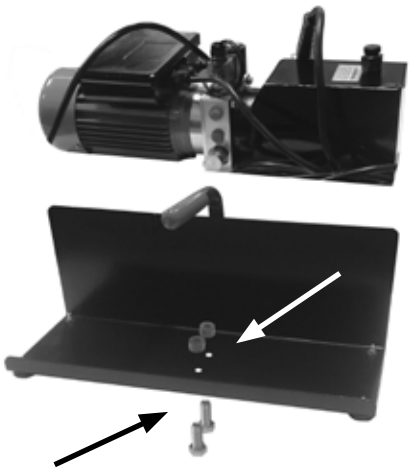

2. Remove protective shipping plugs from both power unit ports.

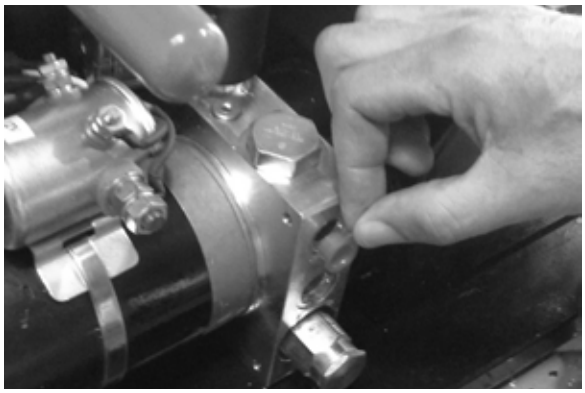

3. Locate both double-male O-ring fittings, then wrap Teflon tape on pipe threads only - NOT O-RING SIDE.

4. Place one double-male O-ring fitting in the lower port, with the O-ring facing inward.

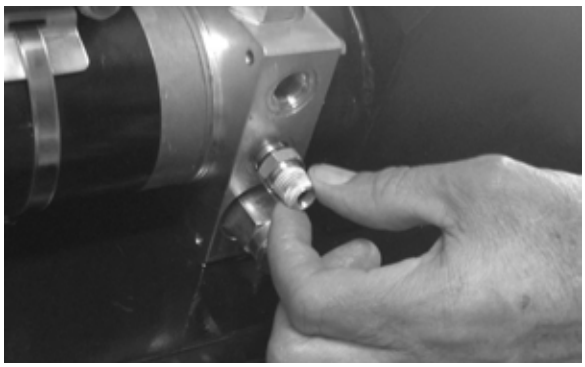

5. Securely tighten fitting.

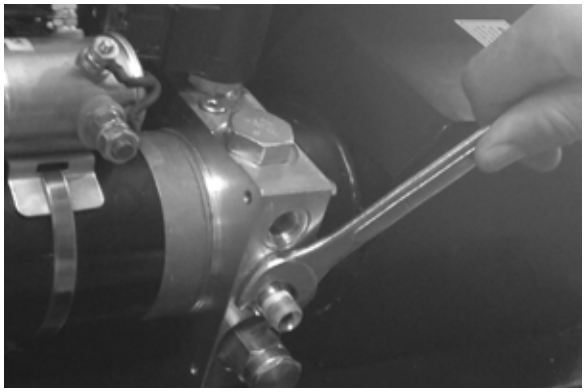

6. Install male quick-connect fitting to lower double-male fitting.

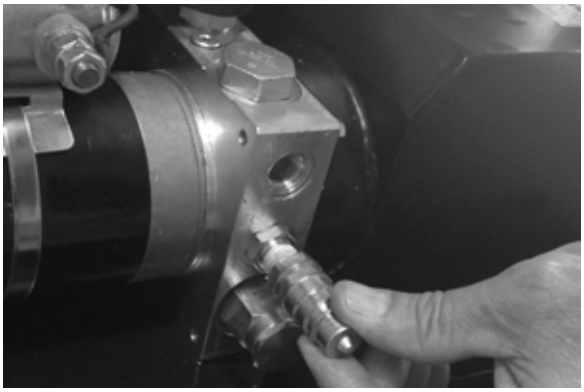

7. Securely tighten fitting.

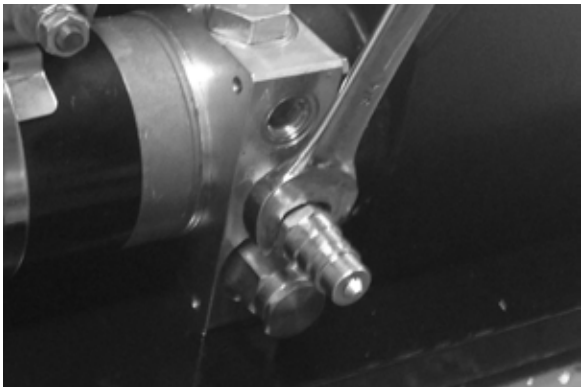

8. Repeat same steps for the upper port. Both fittings should be installed as shown in the images below.

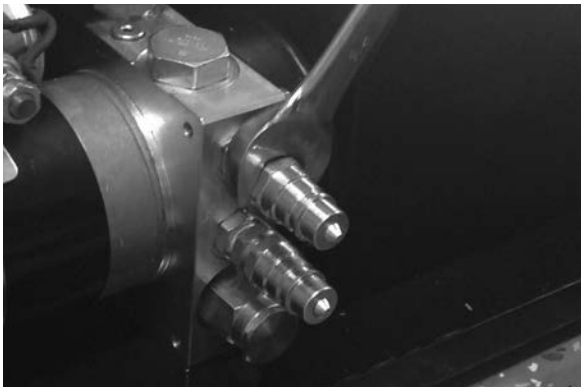

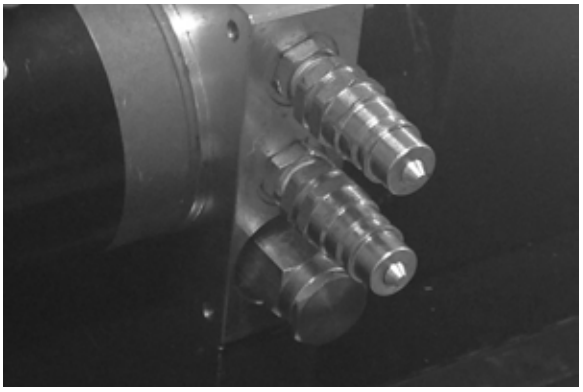

STEP 8
Filling Power Unit Reservoir

CAUTION

DURING THE START-UP PROCEDURE OBSERVE ALL OPERATING COMPONENTS AND CHECK FOR PROPER INSTALLATION AND ADJUSTMENT. DO NOT ATTEMPT TO RAISE A LOAD UNTIL A THORUGH OPERATIONAL CHECK HAS BEEN COMPLETED.

1. Remove complete oil reservoir fill cap and screw nut assembly using an adjustable wrench.

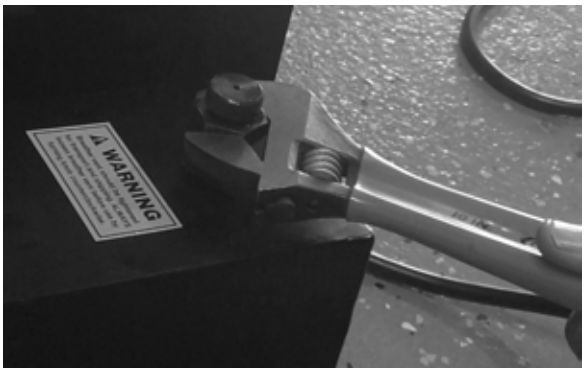

2. Remove cap and place in a non-contaminated area.

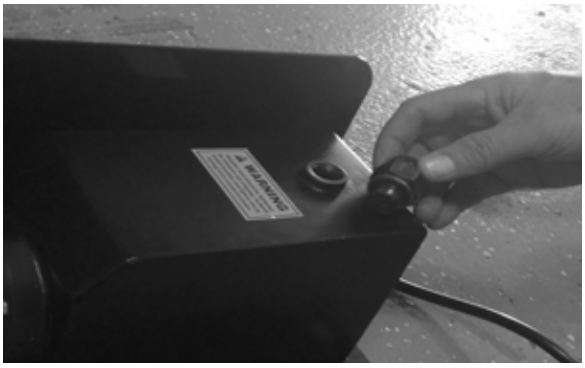

3. Fill the reservoir with approximately 2 quarts of automatic transmission fluid. Make sure the funnel used to fill the power unit oil reservoir is clean.

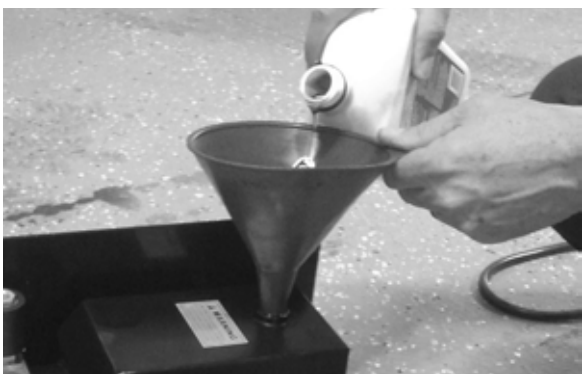

4. Replace oil fill cap assembly and tighten firmly.

STEP 9
Preparing Hoses

CAUTION

READ THE FOLLOWING PROCEDURES BEFORE ATTEMPTING TO CONNECT HOSES TO QUICKJACK AND POWER UNIT.

1. Remove protective caps from threaded fittings on both ends of Twin Hose Assembly.

2. Wrap the threads with Teflon tape. When applying tape, wrap it three times in direction shown below.

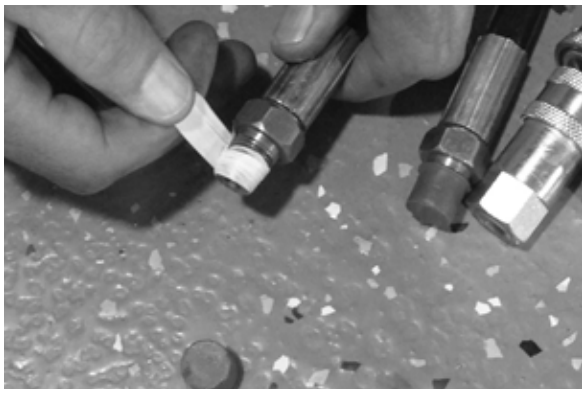

3. Install female quick-connect fitting onto threaded end.

4. Securely tighten female fitting as shown below.

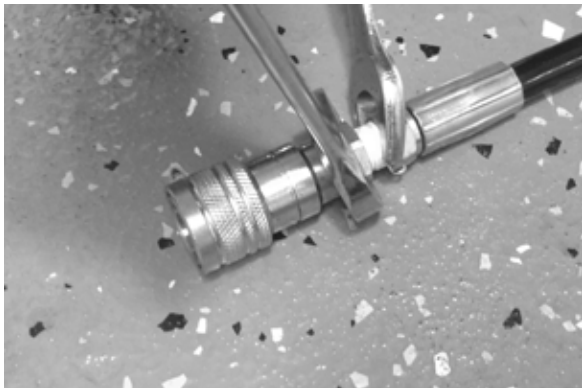

5. Repeat same procedure for ALL four hose ends, as shown in the image below.

6. Locate both Short Leader Hoses and remove protective caps from threaded fittings.

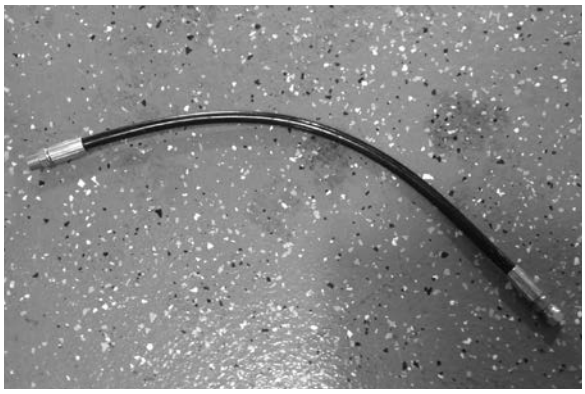

7. Wrap threaded ends with Teflon tape at least three times. Tape should be wrapped in direction shown below.

8. Locate the two remaining male quick-connect fittings and attach to Short Leader Hoses as shown below.

9. Connect both Short Leader Hoses to each hydraulic cylinder.

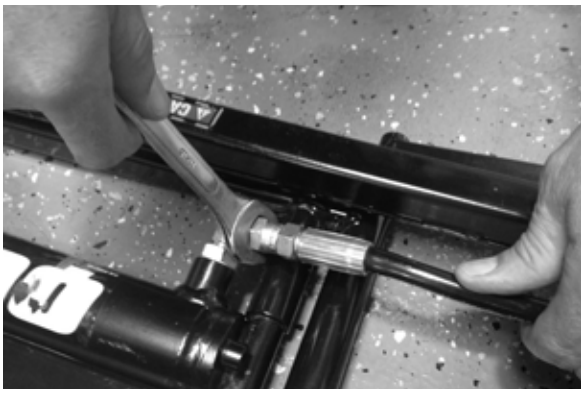

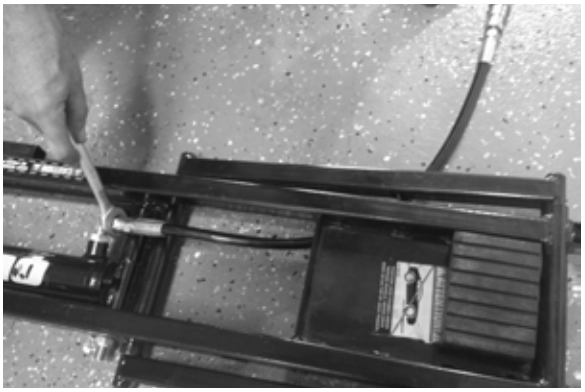

10. Route Short Leader Hoses under frame ends making sure they are clear from any pinch points.

STEP 10
Jack Preparation

1. Place both QuickJack frames on a stable floor surface with both lock bars positioned outwards as illustrated below.

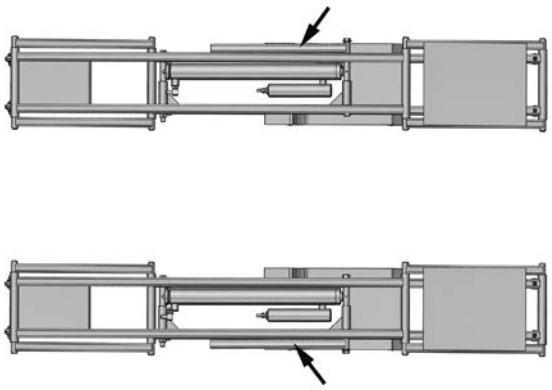

2. Check for proper tension on the safety lock bar retaining nuts. The safety lock bars should remain upright in the stowed position during normal use. They should be manually engaged when required.

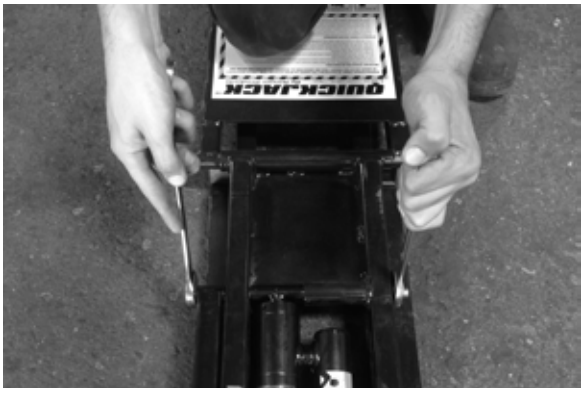

3. Remove any dirt, scales, chips or any foreign debris from your quick-connect fittings to avoid contamination or malfunction of the equipment.

⚠ WARNING

VISUALLY CHECK QUICK-CONNECT FITTINGS FOR CORRODING, CRACKING, DAMAGE OR EXCESSIVE WEAR. IF ANY OF THESE CONDITIONS EXIST, THE QUICK-CONNECT FITTINGS MUST BE REPLACED.

4. TO CONNECT: Install the male fitting into the female fitting. Full connection is made when the ball release sleeve slides forward on the female fitting.
TO DISCONNECT: Hold the male fitting then retract the sleeve on the female fitting until the fittings disconnect.

5. For AC Power Units connect directly to a 110-volt power source.

6. For DC Power Units connect the 12-volt negative source to the negative terminal and the 12-volt positive power source to the positive terminal. See below images or follow instructions accompanying the unit.

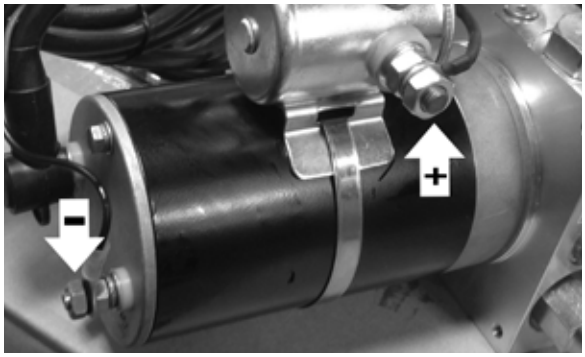

7. Make sure the power unit oil reservoir is full with 2 quarts of automatic transmission fluid

⚠ CAUTION

8. Loosen Breather Screw vent before use by turning knob counter-clockwise. NOTE: Breather vent should be tightened for transport and shipping only.

9. Check air pressure in the air bottle cylinders. Make sure both register 50-PSI. **DO NOT EXCEED 50-PSI.**

10. Test the Power Unit by pressing the UP button. If the motor sounds like it is operating properly, raise jacks half way and check all hose connections for leaks. If the motor gets hot or sounds irregular, stop and check all electrical connections.

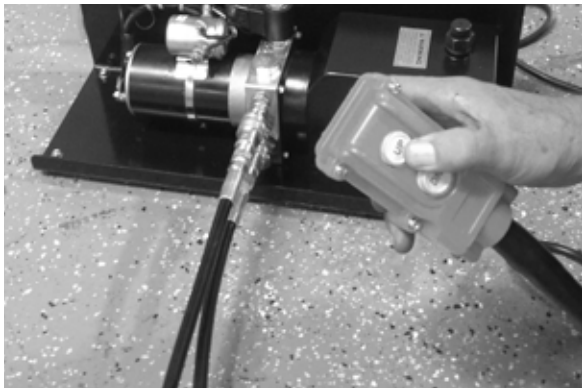

11. Cycle the jack up and down a few times to approximately half the lifting height, ensuring proper operation.

12. Engage safety bars and lower jack onto safeties by depressing the DOWN button. Check both safety lock bars for proper operation before proceeding.

STEP 11
Bleeding the Cylinders

Raise QuickJack approximately half lifting height and then follow these procedures to drain and bleed cylinders.

1. **BLEEDING AIR FROM HYDRAULIC SYSTEM.**
   - Slightly loosen bleeder screw on the back side of the hydraulic cylinder using a hexagon wrench. WARNING: Keeps hands clear of pinch points.

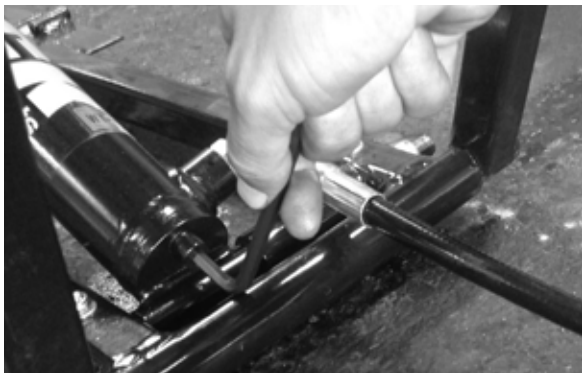

   - Slowly charge the hydraulic cylinders with oil by briefly pressing the UP button on the power unit pendant control. Air and oil will start to exit.

- When you observe oil exiting the cylinder without bubbles, the air has been removed.
- Tighten the hex socket bleed screw using a hexagon wrench to close and create a tight seal. DO NOT OVERTIGHTEN.

2. **REMOVING PACKING OIL FROM AIR CHARGE CYLINDERS.**

- Using a pump or air compressor, inflate each air bottle cylinder to 50-PSI.
- Use a valve tool or blunt-nose tool to depress the valve core plunger to release any accumulated packing oil from the air charge cylinders. WARNING: Lay a towel or cloth over the inflation valve during this process to prevent oil mist from contaminating the immediate area and/or or to prevent oil mist from entering eyes. See image below.

- Repeat steps until air charge cylinders are completely drained of packing oil.
- Place contaminated materials in disposable containers and dispose of in a manner consistent with applicable regulations.

STEP 12
Operation and Use

WARNING

GET FAMILIAR WITH OPERATOR CONTROLS BY RUNNING THE JACKS THROUGH A FEW CYCLES BEFORE LOADING VEHICLE ON QUICKJACK. DURING PRESTART TESTING WITH NO LOAD, THE JACK FRAMES MAY NOT RAISE AND LOWER EVENLY. THIS IS NORMAL. DURING PRESTART TESTING WITH NO LOAD, DO NOT RAISE FRAMES TO FULL HEIGHT, RAISE MIDWAY ONLY.

There are two methods of using the QuickJack when raising vehicles; **INSIDE OUT** and **OUTSIDE IN.**

• **INSIDE OUT:** In this method, the QuickJack frames are positioned directly adjacent each other while the vehicle rolls over into position. Quick Frame Handles are typically required. See below.

Quick Frame Handles are easily installed by simply lifting the jack frames and placing the end channel underneath the frame tubes as shown below.

• **OUTSIDE IN**: In this method, the QuickJack frames are positioned wide enough for vehicle entry. Quick Frame Handles are typically not required. DO NOT drive over hydraulic hose. See below.

IMPORTANT NOTE:
Before loading, both jack frames must be fully lowered and working area cleared of any obstruction before vehicle is brought into position. **DO NOT** drive on or ride vehicles over jack frames at any time.

1. Position four Rubber Lift Blocks in the receiver trays as shown below.

IMPORTANT NOTE:

Do not attempt to lift any load on the upper frame rail. Use Rubber Lift Blocks only. Rubber Lift Blocks must only be placed in the receiver trays.

2. With vehicle in ready position, place each jack frame under the vehicle making sure to position the Rubber Lift Blocks at the factory recommended jacking points. Ensure vehicle is positioned with the center-of-balance placed midway on the jack frames.

TYPICAL JACKING POINTS

Always lift a vehicle according to the manufacturers recommended lifting points. Typical vehicle jacking points are illustrated below.

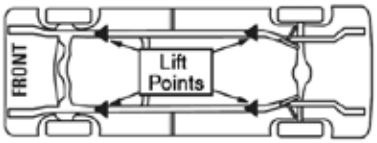

Light Duty Pickup Truck / Van

Perimeter Frame

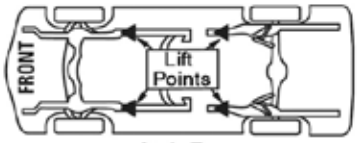

Stub Frame

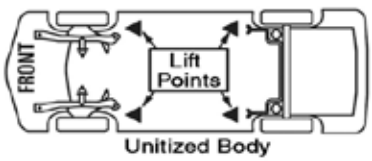

Unitized Body

WARNING

IF THE SPECIFIC VEHICLE LIFT POINTS ARE NOT IDENTIFIED OR IF THE VEHICLE HAS ADDITIONAL OR UNIQUELY POSITIONED PAYLOAD, HAVE A QUALIFIED PERSON CALCULATE THE VEHICLE CENTER OF GRAVITY OR HAVE THE VEHICLE CENTER OF GRAVITY DETERMINED AT A VEHICLE SCALE.

WARNING

MAKE SURE VEHICLE IS NEITHER FRONT NOR REAR HEAVY AND SELECT THE PROPER CONFIGURATION FOR THE VEHICLE TO BE LIFTED AS SHOWN BELOW. CENTER OF BALANCE SHOULD BE MIDWAY BETWEEN RUBBER LIFTING BLOCKS AND CENTERED OVER THE JACK FRAMES.

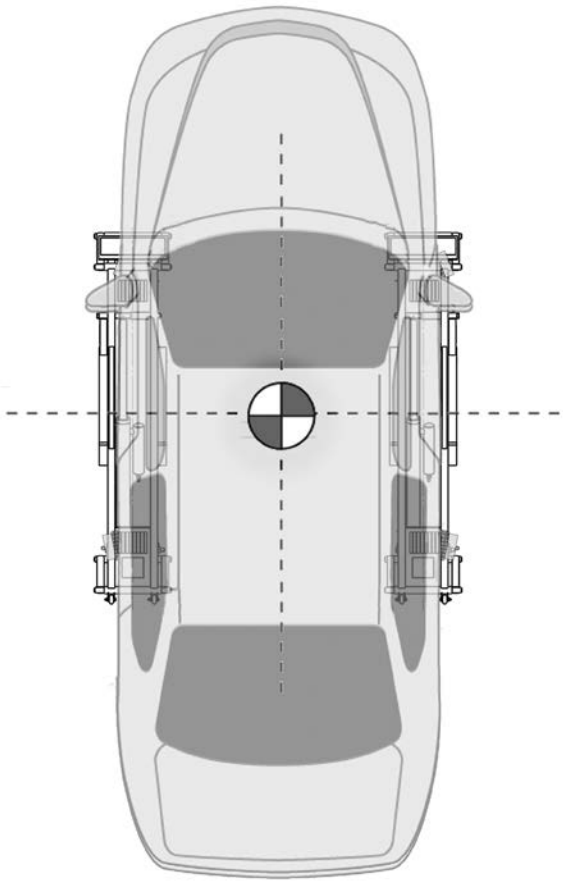

TO RAISE JACK FRAMES

1. Before raising vehicle, be sure all personnel are clear of the surrounding area.

⚠ WARNING

ALWAYS MAKE SURE QUICKJACK FRAMES ARE PARALLEL WITHIN 2” AND ALIGNED EVENLY FRONT AND BACK AS SHOWN IN THE DIAGRAM. FAILURE TO DO SO COULD CAUSE QUICKJACK FRAMES TO BECOME UNSTABLE AND NOT REST SQUARELY ON FLOOR SURFACE.

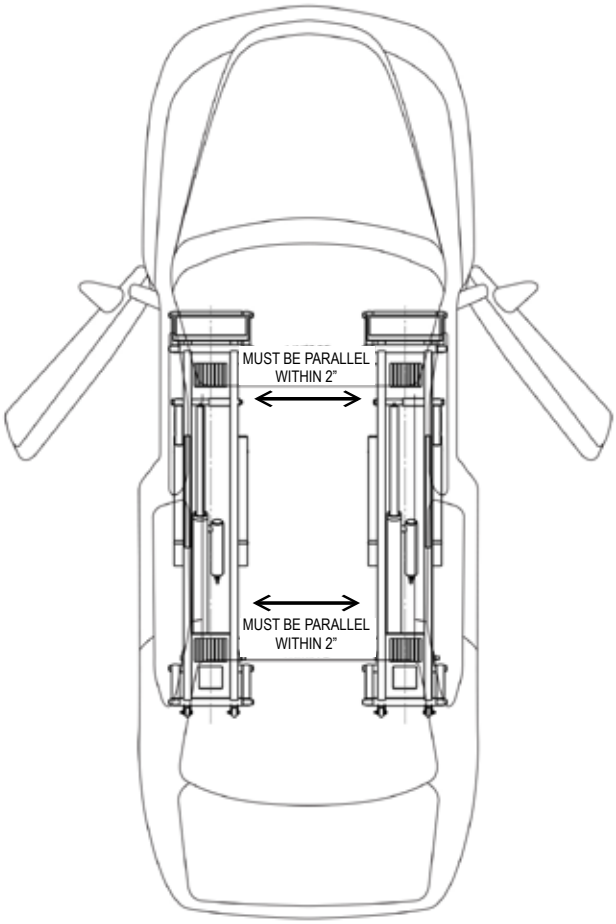

LONGITUDINAL

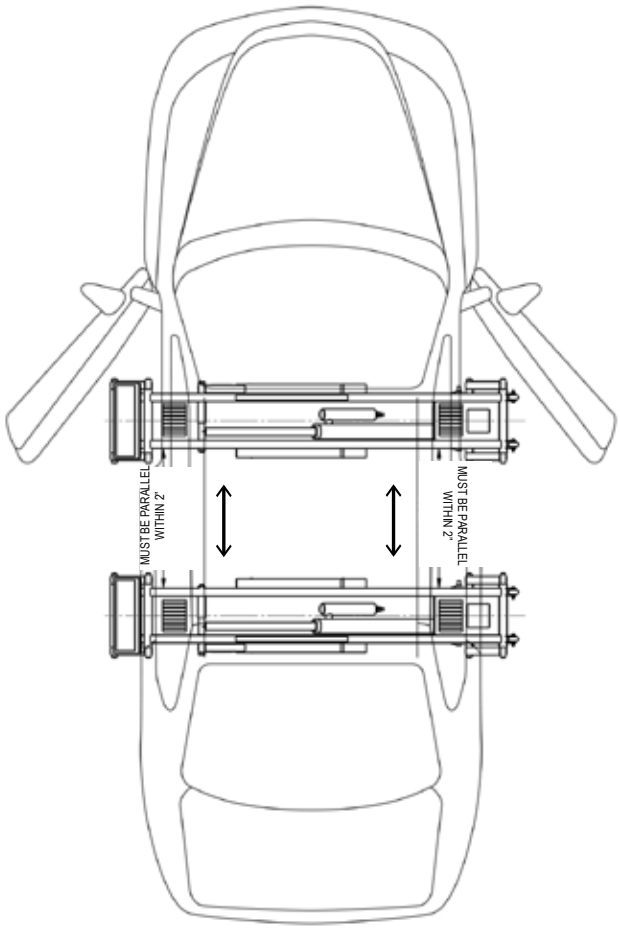

LATITUDINAL

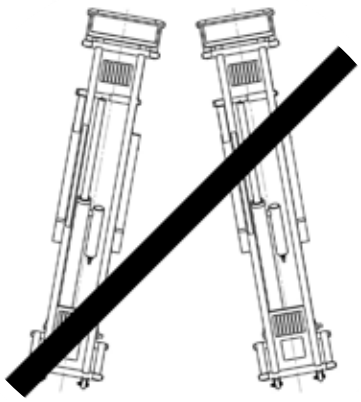

IMPROPER SET-UP

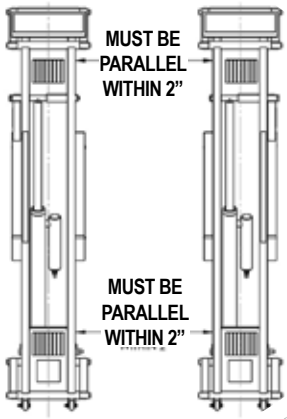

PROPER SET-UP

2. Pay careful attention to overhead clearances - stand clear at all times.
3. Operate the **UP** control until each jack platform makes contact with vehicle undercarriage. Check contact points. If required, slightly position Rubber Lift Blocks as needed.

4. When ready, raise vehicle keeping the UP button continuously depressed until tires clear the floor and the jack frames are at least 12” off the ground or the first safety lock position has been reached.

5. Continue to raise to desired height only if vehicle is secure on lift. Keep hair, loose clothing, fingers, and all parts of body away from moving parts. Keep feet clear of jack when lowering. Avoid pinch points.

6. Operate the UP control until each jack platform reaches either the low locking position or high locking position.

7. Raise vehicle to desired locking position, then ensure both safety lock bars (#1) are fully engaged in their respective receiver (#2) before nearing elevated vehicle. **STAY ALERT**. Use common sense and watch what you are doing. Remember, **SAFETY FIRST**.

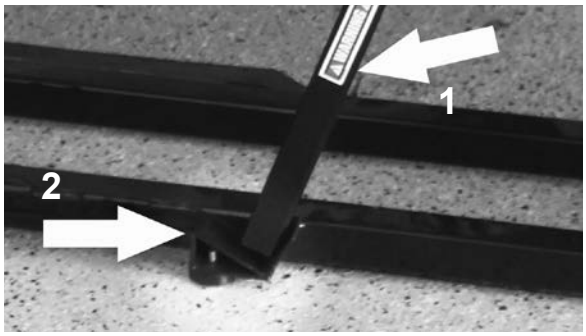

WARNING

ALWAYS MAKE SURE THE SAFETIES ARE ENGAGED BEFORE ATTEMPTING TO WORK ON OR NEAR A VEHICLE.

DO NOT GO NEAR OR UNDER A RAISED VEHICLE IF ALL FOUR RUBBER LIFTING BLOCKS ARE NOT IN SECURE CONTACT WITH VEHICLE.

IMMEDIATELY CLEAR AREA IF VEHICLE IS IN DANGER OF FALLING.

TO LOWER JACK FRAMES

1. Ensure that load is firmly positioned and secured on jack frames.
2. Operate the **UP** control until safety lock bars are clear.
3. Raise and stow the safety lock bars.
4. Stand clear of vehicle and jack frames.
5. Operate the **DOWN** control until both the jack frames are lowered completely to the floor.
6. Using the utility handles, remove the jack frames from underneath the vehicle.
7. **DO NOT** drive or ride vehicles over jack frames at any time.

IMPORTANT NOTE:
Before removing vehicle, both jack frames must be fully lowered and working area cleared of any obstruction before vehicle is brought into position. **DO NOT** drive on or ride vehicles over jack frames at any time.

IMPORTANT OPERATING INSTRUCTIONS

QUICKJACK CANNOT BE RESPONSIBLE FOR DAMAGE OR INJURY RESULTING FROM, LACK OF MAINTENANCE OR UNSAFE USE OF THIS PRODUCT.

READ AND UNDERSTAND ALL WARNINGS AND INSTRUCTIONS BEFORE USE. FAILURE TO READ AND UNDERSTAND THE FOLLOWING WARNINGS MAY RESULT IN PERSONAL INJURY AND/OR PROPERTY DAMAGE. THIS UNIT IS DESIGNED FOR SERVICING LIGHT DUTY PASSENGER OR MOTORSPORT VEHICLES ONLY.

- Read all CAUTIONS, WARNINGS, and INSTRUCTIONS included with, or attached to this equipment prior to use.
- Follow all safety precautions to avoid personal injury or property damage during operation.
- Use on hard level floor surface only.
- Always check vehicle gross weight before attempting to use this equipment.
- DO NOT exceed rated load capacity.
- RUBBER LIFT BLOCKS must only be used in the RECEIVER TRAYS.
- DO NOT attempt to raise any load on the upper frame rails. Use RUBBER LIFT BLOCKS only.
- Get familiar with operator controls by running the jacks through a few cycles before loading vehicle on QuickJack. During prestart testing with no load, the jack frames may not raise and lower evenly. This is normal. <u>During prestart testing with no load, do not raise frames to full height, raise midway only.</u>
- Visually inspect all components for damage prior to use.
- If any damage is found, DO NOT USE THIS EQUIPMENT.

HYDRAULIC POWER SYSTEM WARNINGS:

- All hose couplers must be correctly fastened together before using this equipment or applying pressure.
- NEVER ATTEMPT to connect or disconnect hose couplers while equipment is loaded or hydraulic system is under pressure.
- Keep dust caps on hose couplers when not in use.
- Use every precaution to guard against dirt entering the system.
- USE CAUTION if using thread sealant or Teflon tape when installing hydraulic fittings/couplers. If using tape, trim any loose ends to prevent tape from entering the hydraulic system. Care must be taken to ensure that tape or thread sealant does not enter the hydraulic system. Tape or thread sealant in the fluid will impair fluid flow causing system malfunction.
- Never exceed the rated capacity.
- Inspect entire unit and all fasteners thoroughly before each use.
- Do not operate this equipment if any component is found to be missing, defective or worn.
- Never operate this equipment with any person in close proximity.
- Always ensure load is centered and secure on each jack frame prior to operation.
- When lowering, pay careful attention that all personnel and objects are kept clear.
- Always keep a visual line of site on vehicle and jack frames during operation.
- Always stand clear when unit is in operation.
- Never leave unit in an elevated position unless both safety lock bars are fully engaged.
- Keep all body parts and objects away from hinge or pinch points when unit is in motion.
- Floor surface must be dry, flat, level and compact and have a minimum compressive strength of 500 PSI.
- Always wear durable work clothing during installation and operation. Loose fitting clothing should be avoided.
- Visually confirm that both safety lock bars are engaged before nearing elevated vehicle.
- DO NOT work under an elevated vehicle unless properly rated vehicle jack stands are used and placed under the factory approved jacking points.

⚠ DANGER

- **ALWAYS** make sure lift frames are parallel within 2” and aligned evenly front and back. Failure to do so could cause lift frames to become unstable and not rest squarely on floor surface.
- **DO NOT** leave the controls while the jack is still in motion.
- **DO NOT** stand directly in front of the vehicle or in the bay when vehicle is being loaded into position.
- **DO NOT** go near vehicle or attempt to work on the vehicle when being raised or lowered.
- **REMAIN CLEAR** of jack when raising or lowering vehicle.
- **DO NOT** rock the vehicle while on the jack or remove any heavy component from vehicle that may cause excessive weight shift.
- **DO NOT** lower the vehicle until people, materials, and tools are clear.
- **ALWAYS ENSURE** that the safeties are engaged before any attempt is made to work on or near vehicle.
- Some vehicle maintenance and repair activities may cause the vehicle to shift. Follow the manufacturer’s guidelines when performing these operations. The use of jack stands or alternate lift points may be required when completing some repairs.
- **READ AND UNDERSTAND** all safety warning procedures before operating jack.
- **KEEP HANDS AND FEET CLEAR**. Remove hands and feet from any moving parts. Keep feet clear of jack when lowering. Avoid pinch points.
- **ONLY TRAINED OPERATORS** should operate this jack. All non-trained personnel should be kept away from work area. Never let non-trained personnel come in contact with, or operate jack.
- **USE JACK CORRECTLY**. Use jack in the proper manner. Never use lifting adapters other than what is approved by the manufacturer.
- **CLEAR AREA** if vehicle is on danger of falling.
- **STAY ALERT**. Watch what you are doing. Use common sense. Be aware.
- **CHECK FOR DAMAGED PARTS**. Check for alignment of moving parts, breakage of parts or any condition that may affect its operation. Do not use jack if any component is broken or damaged.
- **NEVER** remove safety related components from the jack. Do not use jack if safety related components are damaged or missing.
- When the jack is being lowered, make sure everyone is standing at least six feet away.
- Be sure there are no tools or equipment left under the jack before lowering.
- Always lower the vehicle down slowly and smoothly.
- **DO NOT** drive or ride vehicle over jack frames at any time.

MAINTENANCE INSTRUCTIONS

QuickJack Maintenance Lubrication Points

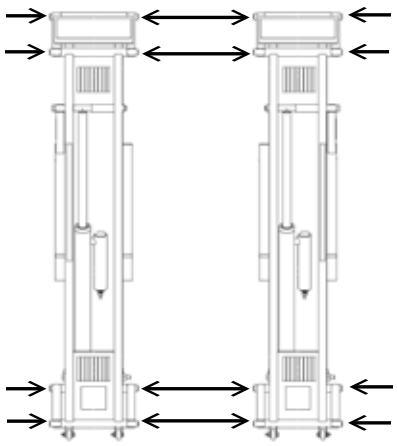

- **ALWAYS** keep bolts tight. Check periodically.
- **ALWAYS** keep lift components clean.
- **ALWAYS** replace FAULTY PARTS before equipment is put back into operation.
- **DAILY**: Make a visual inspection of ALL MOVING PARTS and check for excessive signs of wear.
- **DAILY** Check safety locks to ensure they are in good operating condition.
- **DAILY**: Inspect lift pads for damage or excessive wear. Replace as required with genuine QuickJack parts.
- **WEEKLY:** Check all bolts and pins to ensure proper mounting.
- **MONTHLY**: Lubricate all hinge points and check for excessive wear. (See diagram)
- **SEMI MONTHLY**: Check fluid level of Power Unit and refill if required per installation instructions.
- Replace all caution, warning or safety related decals on the QuickJack if unable to read or missing. Reorder labels from QuickJack.com

SUV AND LIGHT TRUCK ADAPTER KIT

The QuickJack SUV and Light Truck Adapter Kit fits the BL-5000 Series Models Only. This is an OPTIONAL item. Sold separately.

The adapter kit includes:

- (4) 3” Receivers
- (4) 3” Stackable Risers
- (4) Drop-in Contact Pads with Urethane Rubber Tops

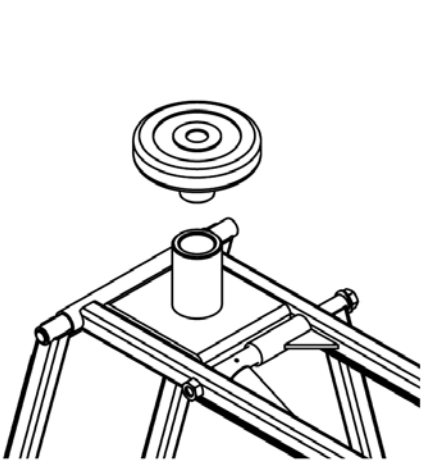

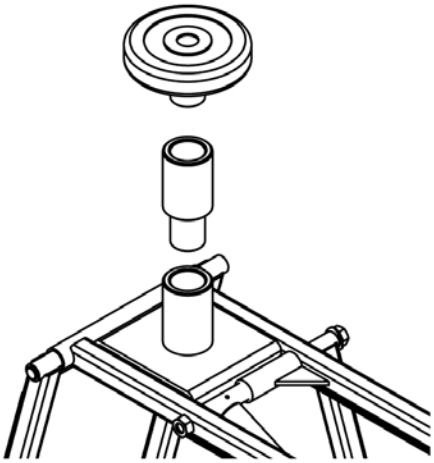

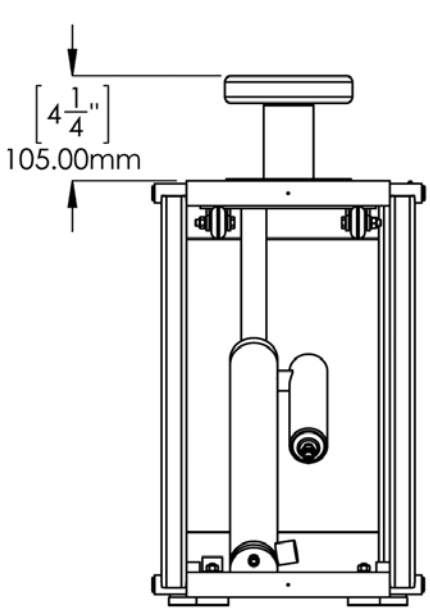

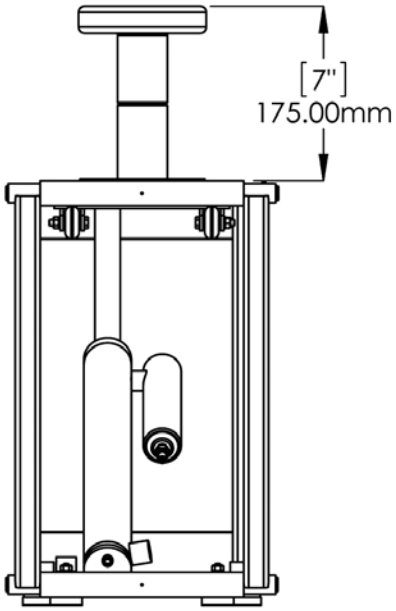

QUICKJACK™
By Ranger Products

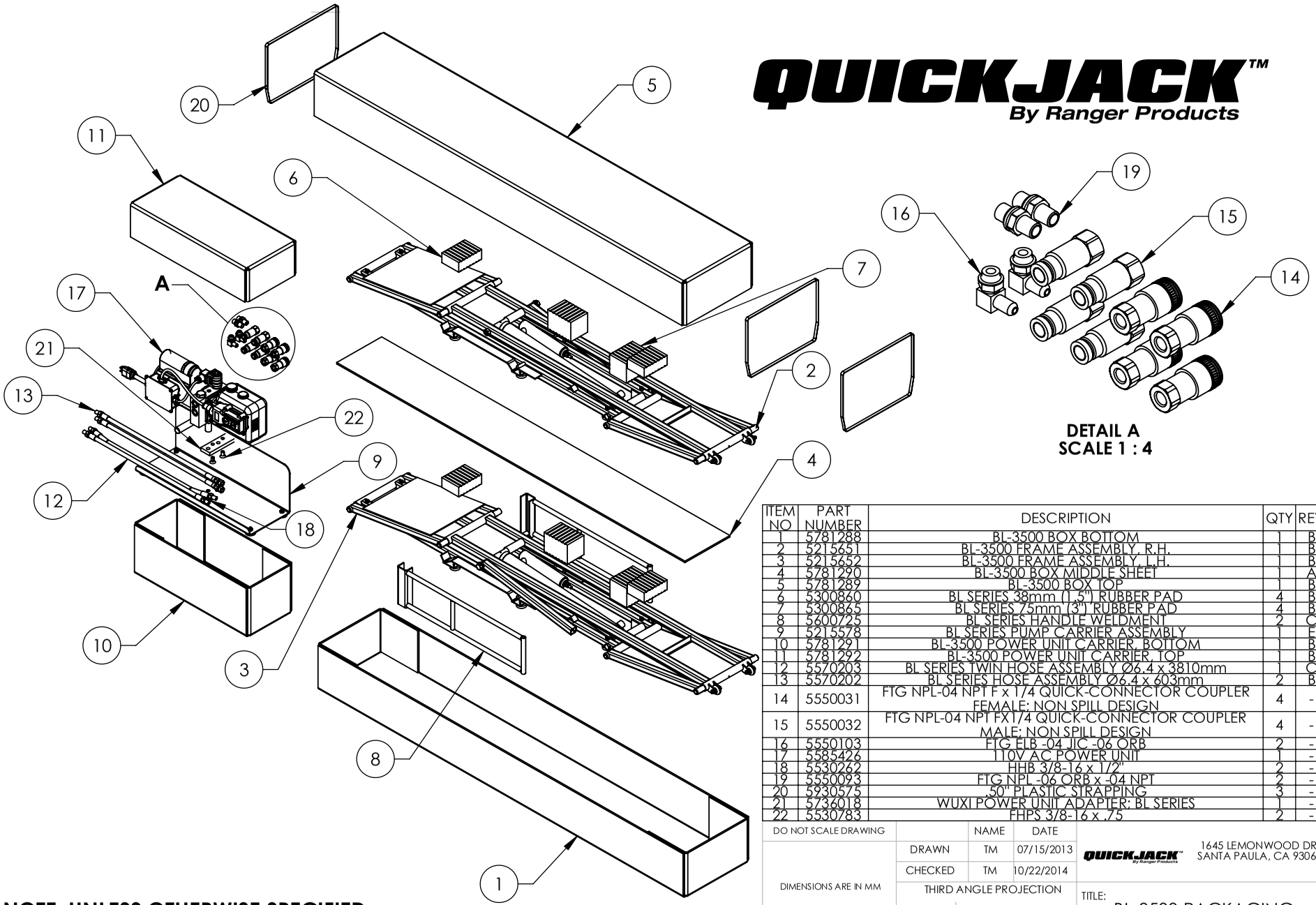

DETAIL A
SCALE 1 : 4

ITEM NO	PART NUMBER	DESCRIPTION	QTY	REV
1	5781288	BL-3500 BOX BOTTOM	1	B
2	5215651	BL-3500 FRAME ASSEMBLY, R.H.	1	B
3	5215652	BL-3500 FRAME ASSEMBLY, L.H.	1	B
4	5781290	BL-3500 BOX MIDDLE SHEET	1	A
5	5781289	BL-3500 BOX TOP	1	B
6	5300860	BL SERIES 38mm (1.5") RUBBER PAD	4	B
7	5300865	BL SERIES 75mm (3") RUBBER PAD	4	B
8	5600725	BL SERIES HANDLE WELDMENT	2	C
9	5215578	BL SERIES PUMP CARRIER ASSEMBLY	1	E
10	5781291	BL-3500 POWER UNIT CARRIER, BOTTOM	1	B
11	5781292	BL-3500 POWER UNIT CARRIER, TOP	1	B
12	5570203	BL SERIES TWIN HOSE ASSEMBLY Ø6.4 x 3810mm	1	C
13	5570202	BL SERIES HOSE ASSEMBLY Ø6.4 x 603mm	2	B
14	5550031	FTG NPL-04 NPT F x 1/4 QUICK-CONNECTOR COUPLER FEMALE; NON SPILL DESIGN	4	-
15	5550032	FTG NPL-04 NPT FX1/4 QUICK-CONNECTOR COUPLER MALE; NON SPILL DESIGN	4	-
16	5550103	FTG ELB -04 JIC -06 ORB	2	-
17	5585426	110V AC POWER UNIT	1	-
18	5530262	HHB 3/8-16 x 1/2"	2	-
19	5550093	FTG NPL -06 ORB x -04 NPT	2	-
20	5930575	.50" PLASTIC STRAPPING	3	-
21	5736018	WUXI POWER UNIT ADAPTER; BL SERIES	1	-
22	5530783	FHPS 3/8-16 x .75	2	-

NOTE: UNLESS OTHERWISE SPECIFIED.
1. ASSEMBLE ITEMS AS SHOWN
2. HOSES SHOWN IN REPRESENTATIONAL FORM
3. COIL HOSES INSIDE 5215578
4. ADD FITTINGS TO PLASTIC BAG AND SECURE INSIDE 5215578

DO NOT SCALE DRAWING

	NAME	DATE
DRAWN	TM	07/15/2013
CHECKED	TM	10/22/2014

DIMENSIONS ARE IN MM

THIRD ANGLE PROJECTION

PROPRIETARY AND CONFIDENTIAL
THE INFORMATION CONTAINED IN THIS DRAWING IS THE SOLE PROPERTY OF **BENDPAK INC.** ANY REPRODUCTION IN PART OR AS A WHOLE WITHOUT THE WRITTEN PERMISSION OF **BENDPAK INC.** IS PROHIBITED.

QUICKJACK™ By Ranger Products
1645 LEMONWOOD DR.
SANTA PAULA, CA 93060

TITLE: BL-3500 PACKAGING

SIZE	DWG. NO.	REV
A	5215626	D

SCALE: 1:16 SHEET 1 OF 1

QUICKJACK™
By Ranger Products

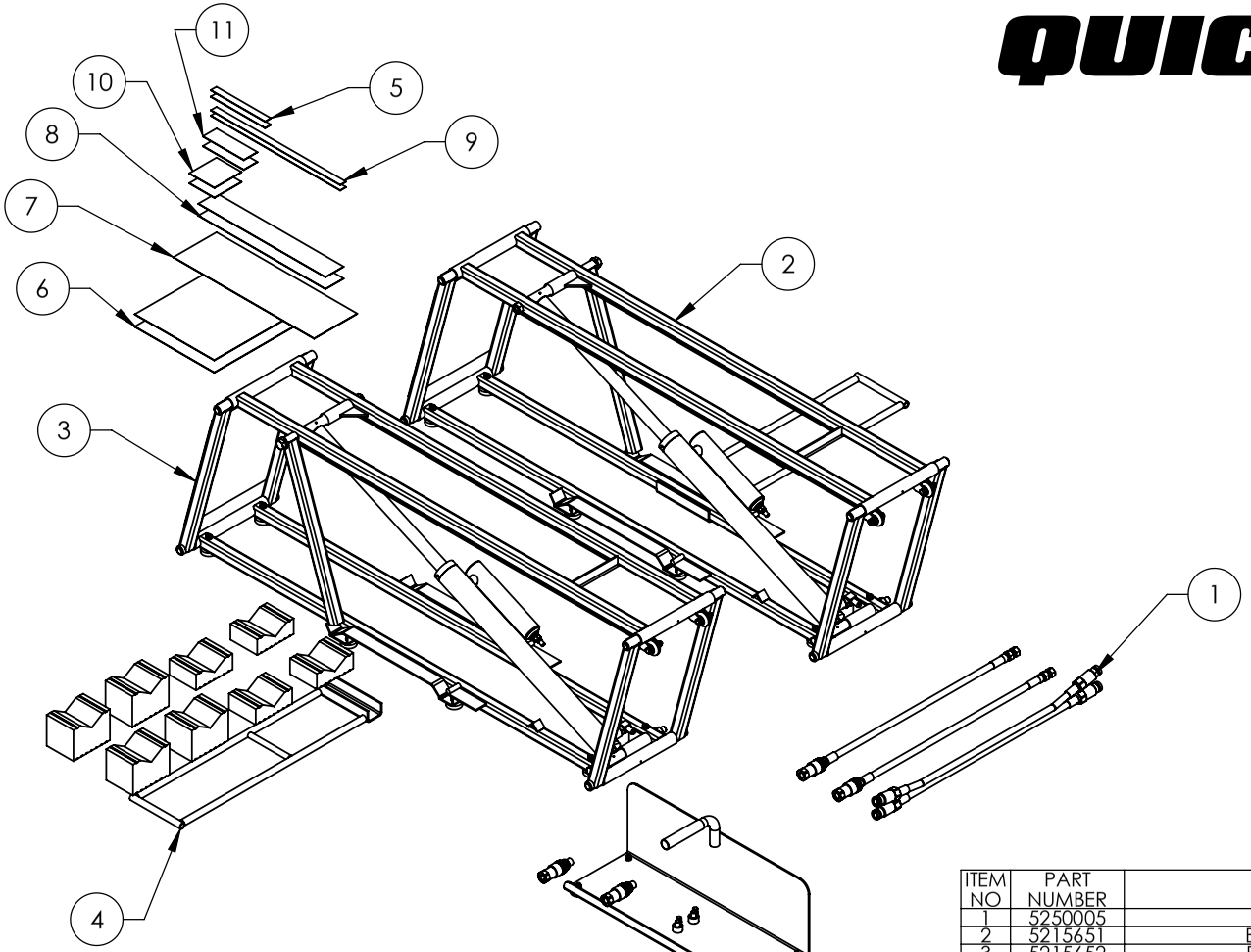

ITEM NO	PART NUMBER	DESCRIPTION	QTY	REV
1	5250005	BL SERIES PARTS BOX	1	E
2	5215651	BL-3500 FRAME ASSEMBLY, R.H.	1	D
3	5215652	BL-3500 FRAME ASSEMBLY, L.H.	1	D
4	5600725	BL SERIES HANDLE WELDMENT	2	D
5	5905730	BL SERIES SAFETY BAR WARNING LABEL	2	-
6	5905740	BL-3500 CAUTION LABEL	2	-
7	5905933	BL-5000XL WARNING INSTRUCTION LABEL	1	-
8	5905745	BL SERIES CYLINDER DECAL	2	-
9	5905750	BL SERIES CAUTION, KEEP HANDS CLEAR	2	-
10	5905765	BL SERIES DO NOT DRIVE ON LABEL	2	-
11	5905770	BL SERIES DANGER / WARNING LABEL	2	-

DO NOT SCALE DRAWING

DIMENSIONS ARE IN MM

	NAME	DATE
DRAWN	TM	02/12/2014
CHECKED	VB	03/03/2015

THIRD ANGLE PROJECTION

PROPRIETARY AND CONFIDENTIAL
THE INFORMATION CONTAINED IN THIS DRAWING IS THE SOLE PROPERTY OF **BENDPAK INC.** ANY REPRODUCTION IN PART OR AS A WHOLE WITHOUT THE WRITTEN PERMISSION OF **BENDPAK INC.** IS PROHIBITED.

QUICKJACK By Ranger Products
1645 LEMONWOOD DR.
SANTA PAULA, CA 93060

TITLE: BL-3500 PRODUCTION LIFT VER B

SIZE	DWG. NO.	REV
A	5260110	F

SCALE: 1:14 SHEET 1 OF 3

NOTE: UNLESS OTHERWISE SPECIFIED.

1. SEE SHIPPING INSTRUCTIONS FOR FINAL PACKAGING

QUICKJACK™
By Ranger Products

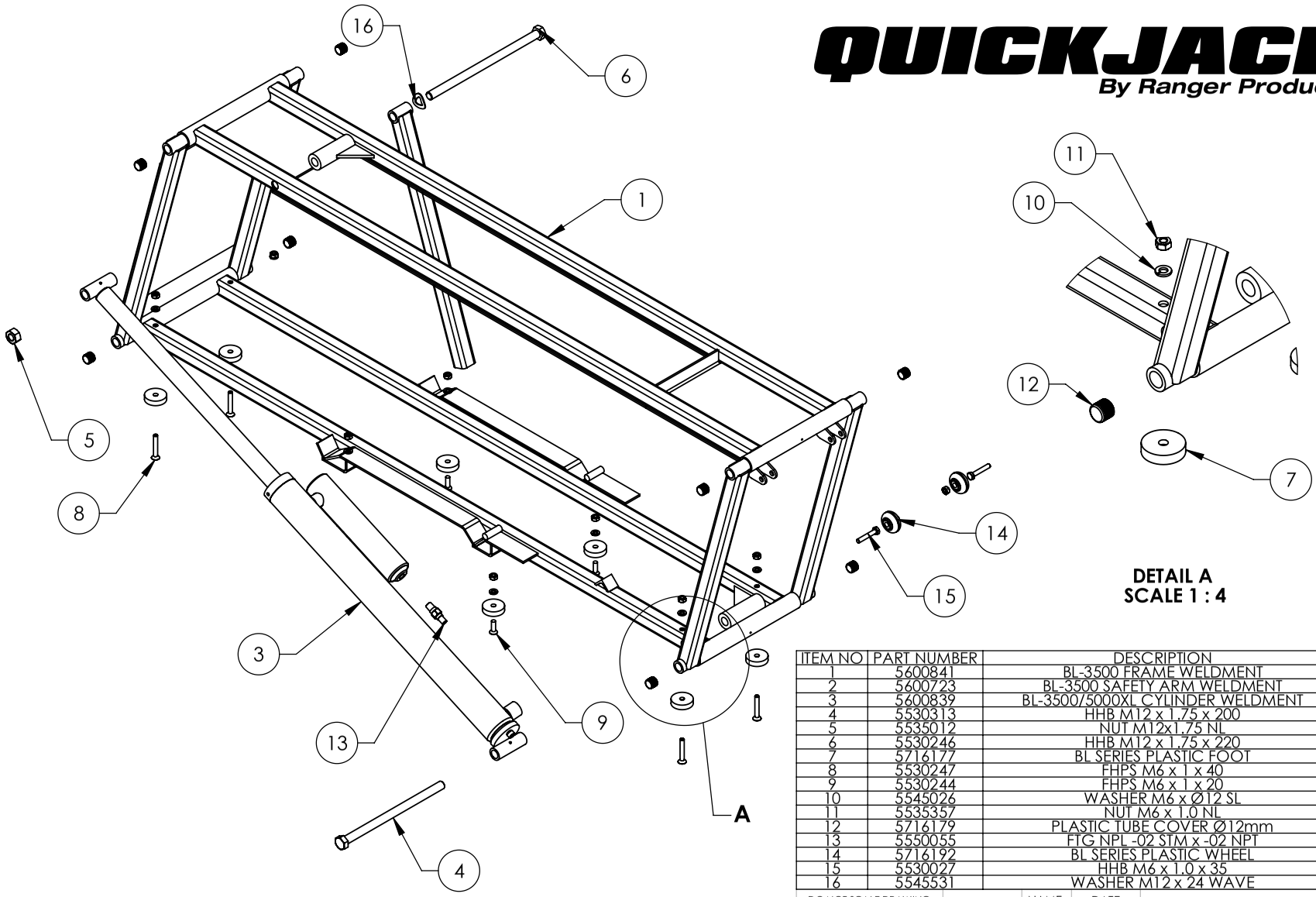

DETAIL A
SCALE 1 : 4

ITEM NO	PART NUMBER	DESCRIPTION	QTY	REV
1	5600841	BL-3500 FRAME WELDMENT	1	C
2	5600723	BL-3500 SAFETY ARM WELDMENT	1	D
3	5600839	BL-3500/5000XL CYLINDER WELDMENT	1	C
4	5530313	HHB M12 x 1.75 x 200	1	-
5	5535012	NUT M12x1.75 NL	2	-
6	5530246	HHB M12 x 1.75 x 220	1	-
7	5716177	BL SERIES PLASTIC FOOT	8	C
8	5530247	FHPS M6 x 1 x 40	4	-
9	5530244	FHPS M6 x 1 x 20	4	-
10	5545026	WASHER M6 x Ø12 SL	10	-
11	5535357	NUT M6 x 1.0 NL	10	-
12	5716179	PLASTIC TUBE COVER Ø12mm	8	-
13	5550055	FTG NPL -02 STM x -02 NPT	1	-
14	5716192	BL SERIES PLASTIC WHEEL	2	A
15	5530027	HHB M6 x 1.0 x 35	2	-
16	5545531	WASHER M12 x 24 WAVE	1	-

DO NOT SCALE DRAWING

	NAME	DATE
DRAWN	TM	02/11/2014
CHECKED	MR	11/13/2014

DIMENSIONS ARE IN MM

THIRD ANGLE PROJECTION

PROPRIETARY AND CONFIDENTIAL
THE INFORMATION CONTAINED IN THIS DRAWING IS THE SOLE PROPERTY OF **BENDPAK INC.** ANY REPRODUCTION IN PART OR AS A WHOLE WITHOUT THE WRITTEN PERMISSION OF **BENDPAK INC.** IS PROHIBITED.

QUICKJACK™ By Ranger Products
1645 LEMONWOOD DR.
SANTA PAULA, CA 93060

TITLE:
BL-3500 FRAME ASSEMBLY, R.H.

SIZE	DWG. NO.	REV
A	5215651	D

SCALE: 1:8 SHEET 1 OF 1

NEXT ASSEMBLY
5260110

NOTE: UNLESS OTHERWISE SPECIFIED.
1. SEE SHIPPING INSTRUCTIONS FOR FINAL PACKAGING
2. ASSEMBLE ITEMS AS SHOWN

QUICKJACK™
By Ranger Products

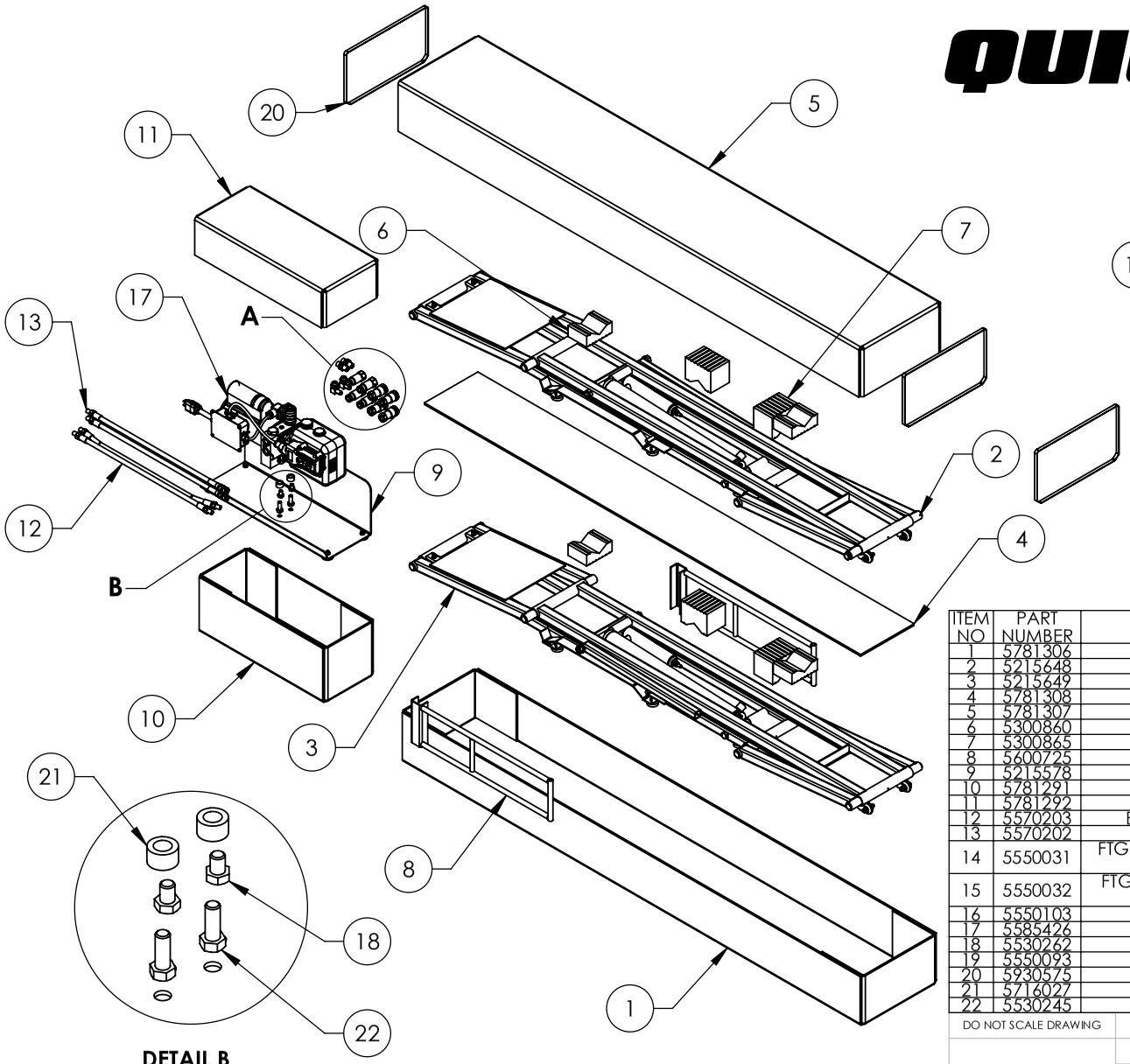

DETAIL B
SCALE 1 : 4

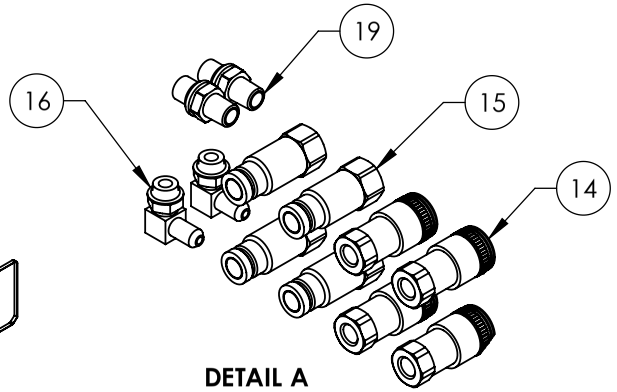

DETAIL A
SCALE 1 : 4

ITEM NO	PART NUMBER	DESCRIPTION	QTY	REV
1	5781306	BL-5000XL/5000 BOX BOTTOM	1	C
2	5215648	BL-5000 FRAME ASSEMBLY, R.H.	1	D
3	5215649	BL-5000 FRAME ASSEMBLY, L.H.	1	D
4	5781308	BL-5000XL/5000 BOX MIDDLE SHEET	1	C
5	5781307	BL-5000XL/5000 BOX TOP	1	C
6	5300860	BL SERIES 38mm (1.5") RUBBER PAD	4	C
7	5300865	BL SERIES 75mm (3") RUBBER PAD	4	C
8	5600725	BL SERIES HANDLE WELDMENT	2	D
9	5215578	BL SERIES PUMP CARRIER ASSEMBLY	1	F
10	5781291	BL SERIES POWER UNIT CARRIER BOX, BOTTOM	1	C
11	5781292	BL SERIES POWER UNIT CARRIER BOX, TOP	1	C
12	5570203	BL SERIES TWIN HOSE ASSEMBLY Ø6.4 x 3810mm	1	C
13	5570202	BL SERIES HOSE ASSEMBLY Ø6.4 x 603mm	2	C
14	5550031	FTG NPL-04 NPT F x 1/4 QUICK-CONNECTOR COUPLER FEMALE; NON SPILL DESIGN	4	-
15	5550032	FTG NPL-04 NPT FX1/4 QUICK-CONNECTOR COUPLER MALE; NON SPILL DESIGN	4	-
16	5550103	FTG ELB -04 JIC -06 ORB	2	-
17	5585426	110V AC POWER UNIT	1	-
18	5530262	HHB 3/8-16 x 1/2"	2	-
19	5550093	FTG NPL -06 ORB x -04 NPT	2	-
20	5930575	.50" PLASTIC STRAPPING	3	A
21	5716027	BL SERIES PLATIC WUXI POWER UNIT ADAPTER	2	B
22	5530245	HHB 3/8"-16 X 1"	2	-

NOTE: UNLESS OTHERWISE SPECIFIED.

1. ASSEMBLE ITEMS AS SHOWN
2. HOSES SHOWN IN REPRESENTATIONAL FORM
3. COIL HOSES INSIDE 5215578
4. ADD FITTINGS TO PLASTIC BAG AND SECURE INSIDE 5215578

		NAME	DATE
DO NOT SCALE DRAWING	DRAWN	TM	01/31/2014
	CHECKED	TM	03/03/2015

DIMENSIONS ARE IN MM

THIRD ANGLE PROJECTION

PROPRIETARY AND CONFIDENTIAL
THE INFORMATION CONTAINED IN THIS DRAWING IS THE SOLE PROPERTY OF **BENDPAK INC.** ANY REPRODUCTION IN PART OR AS A WHOLE WITHOUT THE WRITTEN PERMISSION OF **BENDPAK INC.** IS PROHIBITED.

QUICKJACK By Ranger Products
1645 LEMONWOOD DR.
SANTA PAULA, CA 93060

TITLE: BL-5000 PACKAGING

SIZE	DWG. NO.	REV
A	5215650	F

SCALE: 1:18 SHEET 1 OF 1

QUICKJACK™
By Ranger Products

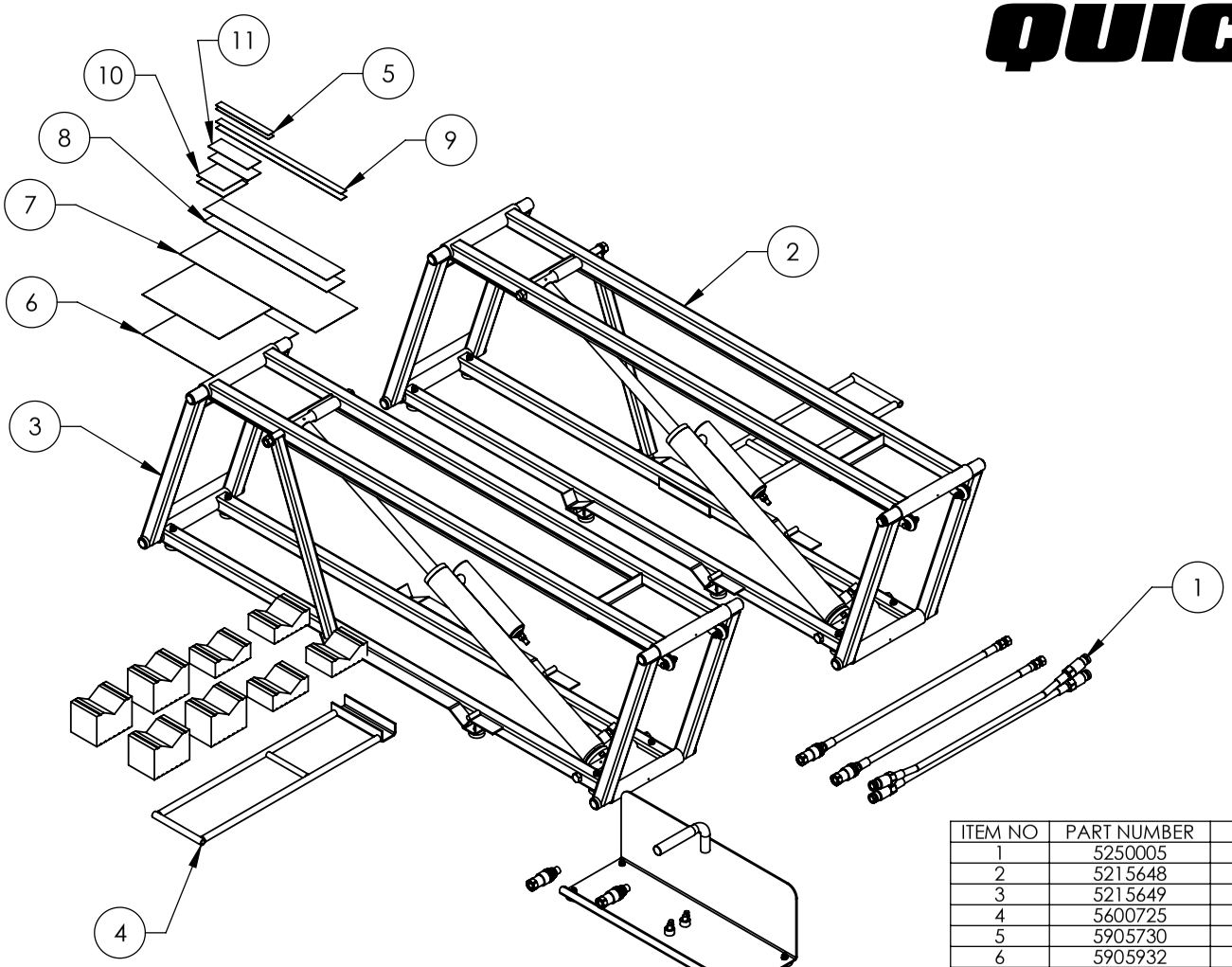

ITEM NO	PART NUMBER	DESCRIPTION	QTY	REV
1	5250005	BL SERIES PARTS BOX	1	E
2	5215648	BL-5000 FRAME ASSEMBLY, R.H.	1	D
3	5215649	BL-5000 FRAME ASSEMBLY, L.H.	1	D
4	5600725	BL SERIES HANDLE WELDMENT	2	D
5	5905730	BL SERIES SAFETY BAR WARNING LABEL	2	-
6	5905932	BL-5000XL CAUTION LABEL	2	-
7	5905933	BL-5000XL WARNING INSTRUCTION LABEL	1	-
8	5905745	BL SERIES CYLINDER DECAL	2	-
9	5905750	BL SERIES CAUTION, KEEP HANDS CLEAR	2	-
10	5905765	BL SERIES DO NOT DRIVE ON LABEL	2	-
11	5905770	BL SERIES DANGER / WARNING LABEL	2	-

DO NOT SCALE DRAWING

	NAME	DATE
DRAWN	TM	01/28/2014
CHECKED	VB	03/03/2015

DIMENSIONS ARE IN MM

THIRD ANGLE PROJECTION

PROPRIETARY AND CONFIDENTIAL
THE INFORMATION CONTAINED IN THIS DRAWING IS THE SOLE PROPERTY OF **BENDPAK INC.** ANY REPRODUCTION IN PART OR AS A WHOLE WITHOUT THE WRITTEN PERMISSION OF **BENDPAK INC.** IS PROHIBITED.

QUICKJACK By Ranger Products
1645 LEMONWOOD DR.
SANTA PAULA, CA 93060

TITLE: BL-5000 PRODUCTION LIFT VER B

SIZE	DWG. NO.	REV
A	5260238	F

SCALE: 1:14 SHEET 1 OF 3

NOTE: UNLESS OTHERWISE SPECIFIED.

1. SEE SHIPPING INSTRUCTIONS FOR FINAL PACKAGING

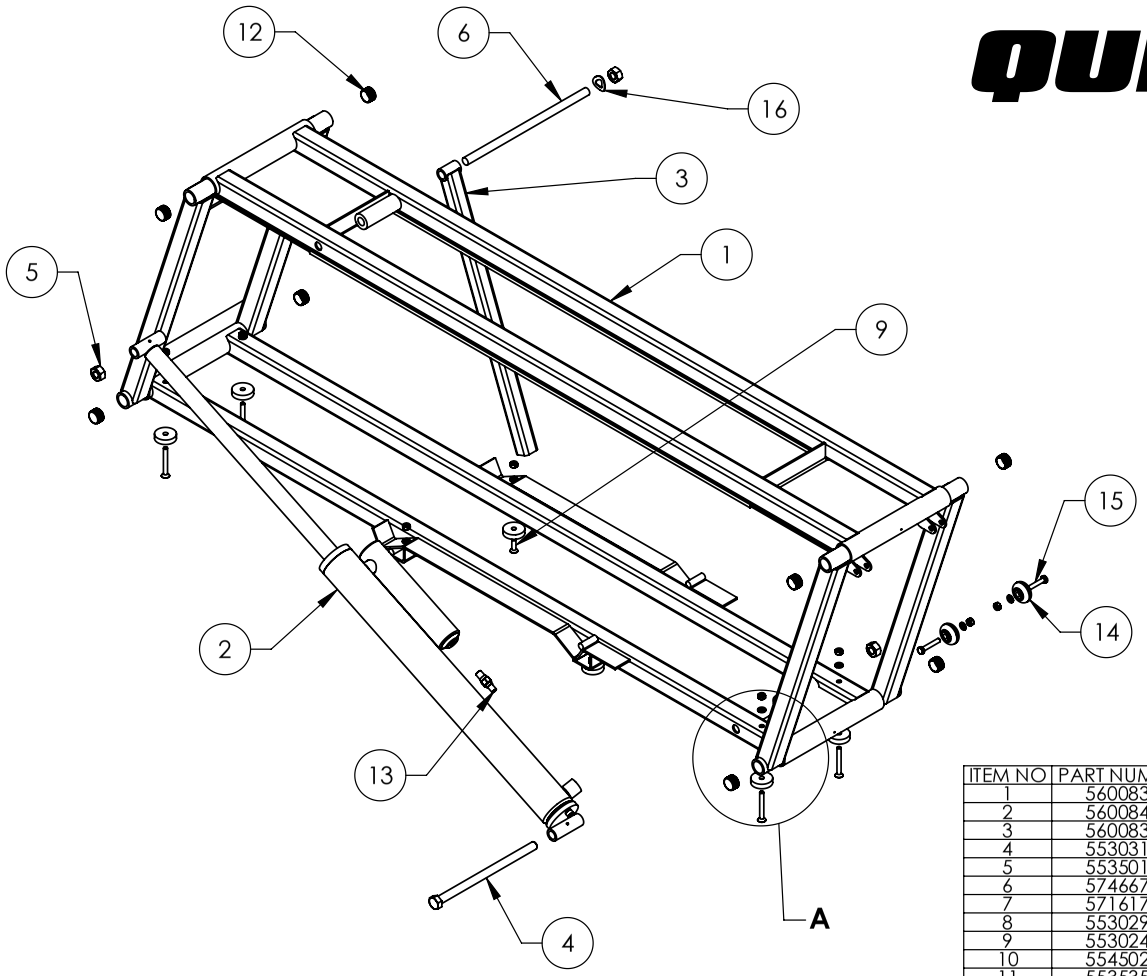

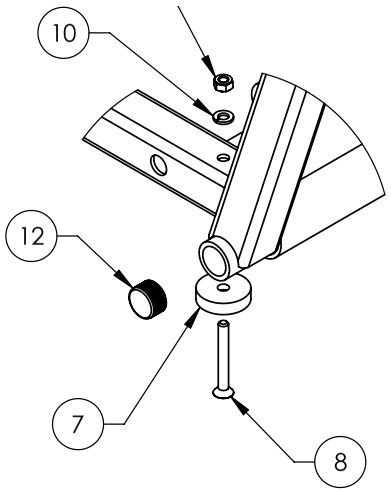

DETAIL A
SCALE 1 : 4

ITEM NO	PART NUMBER	DESCRIPTION	QTY	REV
1	5600834	BL-5000 FRAME WELDMENT	1	D
2	5600840	BL-5000 CYLINDER WELDMENT	1	A
3	5600833	BL-5000 SAFETY ARM WELDMENT	1	A
4	5530313	HHB M12 x 1.75 x 200	1	-
5	5535012	NUT M12x1.75 NL	3	-
6	5746670	DOUBLE THREADED ROD M12 x 1.75 x 250	1	-
7	5716177	BL SERIES PLASTIC FOOT	8	C
8	5530293	FHPS M6 x 1 x 50	4	-
9	5530244	FHPS M6 x 1 x 20	4	-
10	5545026	WASHER M6 x Ø12 SL	10	-
11	5535357	NUT M6 x 1.0 NL	10	-
12	5716198	PLASTIC TUBE COVER Ø19mm	8	-
13	5550055	FTG NPL -02 STM x -02 NPT	1	-
14	5716192	BL SERIES PLASTIC WHEEL	2	A
15	5530027	HHB M6 x 1.0 x 35	2	-
16	5545531	WASHER M12 x 24 WAVE	1	-

NOTE: UNLESS OTHERWISE SPECIFIED.
1. SEE SHIPPING INSTRUCTIONS FOR FINAL PACKAGING
2. ASSEMBLE ITEMS AS SHOWN

NEXT ASSEMBLY
5260238

DO NOT SCALE DRAWING

DIMENSIONS ARE IN MM

	NAME	DATE
DRAWN	TM	01/28/2014
CHECKED		

THIRD ANGLE PROJECTION

PROPRIETARY AND CONFIDENTIAL
THE INFORMATION CONTAINED IN THIS DRAWING IS THE SOLE PROPERTY OF **BENDPAK INC.** ANY REPRODUCTION IN PART OR AS A WHOLE WITHOUT THE WRITTEN PERMISSION OF **BENDPAK INC.** IS PROHIBITED.

QUICKJACK™ By Ranger Products
1645 LEMONWOOD DR.
SANTA PAULA, CA 93060

TITLE:
BL-5000 FRAME ASSEMBLY, R.H.

SIZE	DWG. NO.	REV
A	5215648	D

SCALE: 1:10

SHEET 1 OF 1

QUICKJACK™
By Ranger Products

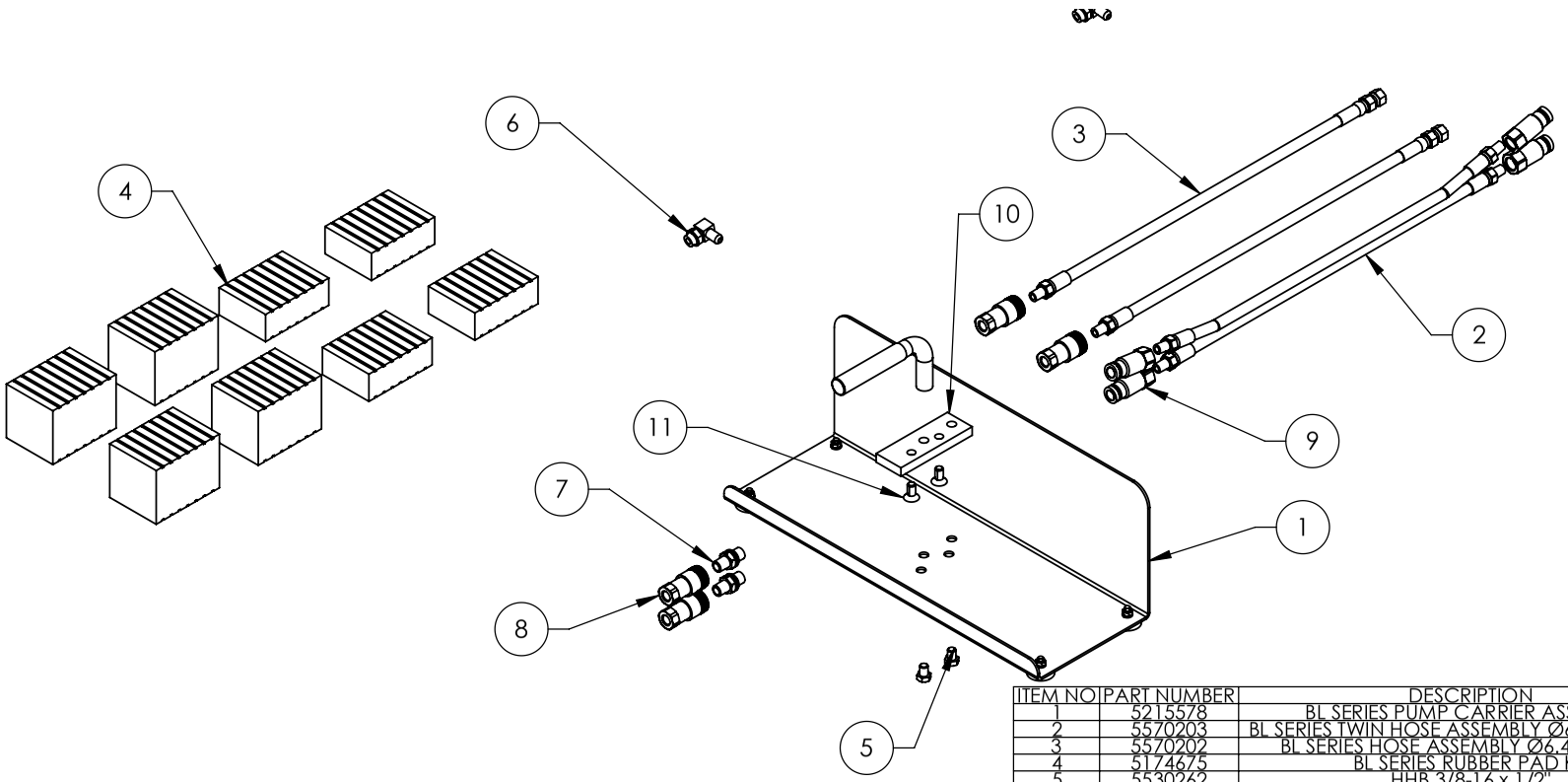

ITEM NO	PART NUMBER	DESCRIPTION	QTY	REV
1	5215578	BL SERIES PUMP CARRIER ASSEMBLY	1	E
2	5570203	BL SERIES TWIN HOSE ASSEMBLY Ø6.4 x 3810mm	1	C
3	5570202	BL SERIES HOSE ASSEMBLY Ø6.4 x 603mm	2	B
4	5174675	BL SERIES RUBBER PAD KIT	1	B
5	5530262	HHB 3/8-16 x 1/2"	2	-
6	5550103	FTG ELB -04 JIC -06 ORB	2	-
7	5550093	FTG NPL -06 ORB x -04 NPT	2	-
8	5550031	FTG NPL-04 NPT F x 1/4 QUICK-CONNECTOR COUPLER FEMALE; NON SPILL DESIGN	4	-
9	5550032	FTG NPL-04 NPT FX1/4 QUICK-CONNECTOR COUPLER MALE; NON SPILL DESIGN	4	-
10	5736018	WUXI POWER UNIT ADAPTER; BL SERIES	1	A
11	5530783	FHPS 3/8-16 x .75	2	-

DO NOT SCALE DRAWING		NAME	DATE
DIMENSIONS ARE IN MM	DRAWN	TM	10/23/2013
	CHECKED		
	THIRD ANGLE PROJECTION		

QUICKJACK™ By Ranger Products 1645 LEMONWOOD DR. SANTA PAULA, CA 93060

TITLE: BL SERIES PARTS BOX

SIZE	DWG. NO.	REV
A	5250005	C

SCALE: 1:8 SHEET 1 OF 1

PROPRIETARY AND CONFIDENTIAL
THE INFORMATION CONTAINED IN THIS DRAWING IS THE SOLE PROPERTY OF BENDPAK INC. ANY REPRODUCTION IN PART OR AS A WHOLE WITHOUT THE WRITTEN PERMISSION OF BENDPAK INC. IS PROHIBITED.

NEXT ASSEMBLY
5260110
5260238

NOTE: UNLESS OTHERWISE SPECIFIED.

1. SEE SHIPPING INSTRUCTIONS FOR FINAL PACKAGING

QUICKJACK™
By Ranger Products

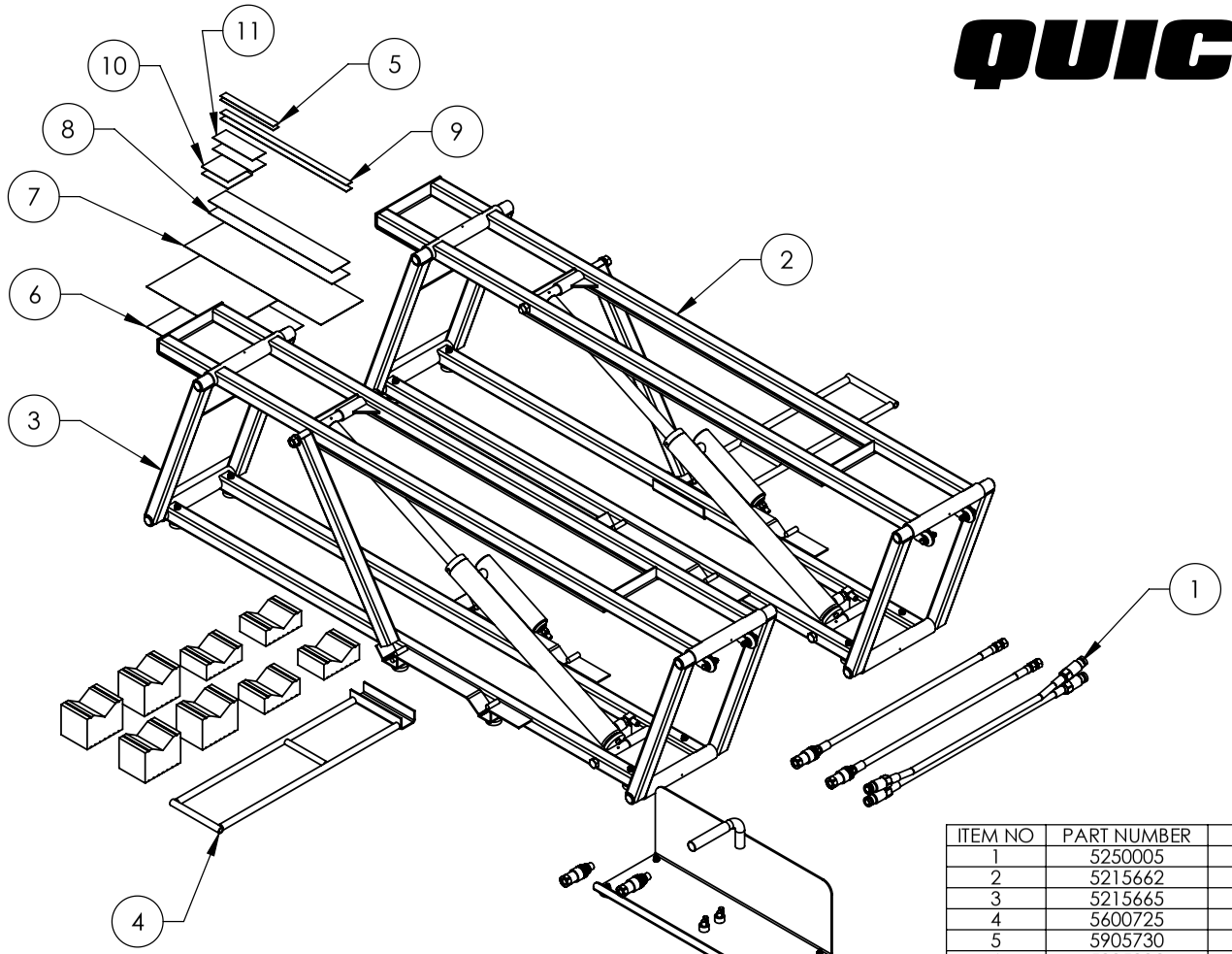

ITEM NO	PART NUMBER	DESCRIPTION	QTY	REV
1	5250005	BL SERIES PARTS BOX	1	E
2	5215662	BL-5000XL FRAME ASSEMBLY, R.H.	1	B
3	5215665	BL-5000XL FRAME ASSEMBLY, L.H.	1	B
4	5600725	BL SERIES HANDLE WELDMENT	2	D
5	5905730	BL SERIES SAFETY BAR WARNING LABEL	2	-
6	5905932	BL-5000XL CAUTION LABEL	2	-
7	5905933	BL-5000XL WARNING INSTRUCTION LABEL	1	-
8	5905745	BL SERIES CYLINDER DECAL	2	-
9	5905750	BL SERIES CAUTION, KEEP HANDS CLEAR	2	-
10	5905765	BL SERIES DO NOT DRIVE ON LABEL	2	-
11	5905770	BL SERIES DANGER / WARNING LABEL	2	-

DO NOT SCALE DRAWING

	NAME	DATE
DRAWN	TM	10/29/2014
CHECKED	VB	03/03/2015

DIMENSIONS ARE IN MM

THIRD ANGLE PROJECTION

PROPRIETARY AND CONFIDENTIAL
THE INFORMATION CONTAINED IN THIS DRAWING IS THE SOLE PROPERTY OF **BENDPAK INC.** ANY REPRODUCTION IN PART OR AS A WHOLE WITHOUT THE WRITTEN PERMISSION OF **BENDPAK INC.** IS PROHIBITED.

QUICKJACK™ By Ranger Products 1645 LEMONWOOD DR. SANTA PAULA, CA 93060

TITLE: BL-5000XL PRODUCTION LIFT VER B

SIZE	DWG. NO.	REV
A	5260111	C

SCALE: 1:14 SHEET 1 OF 3

NOTE: UNLESS OTHERWISE SPECIFIED.

1. SEE SHIPPING INSTRUCTIONS FOR FINAL PACKAGING

QUICKJACK™
By Ranger Products

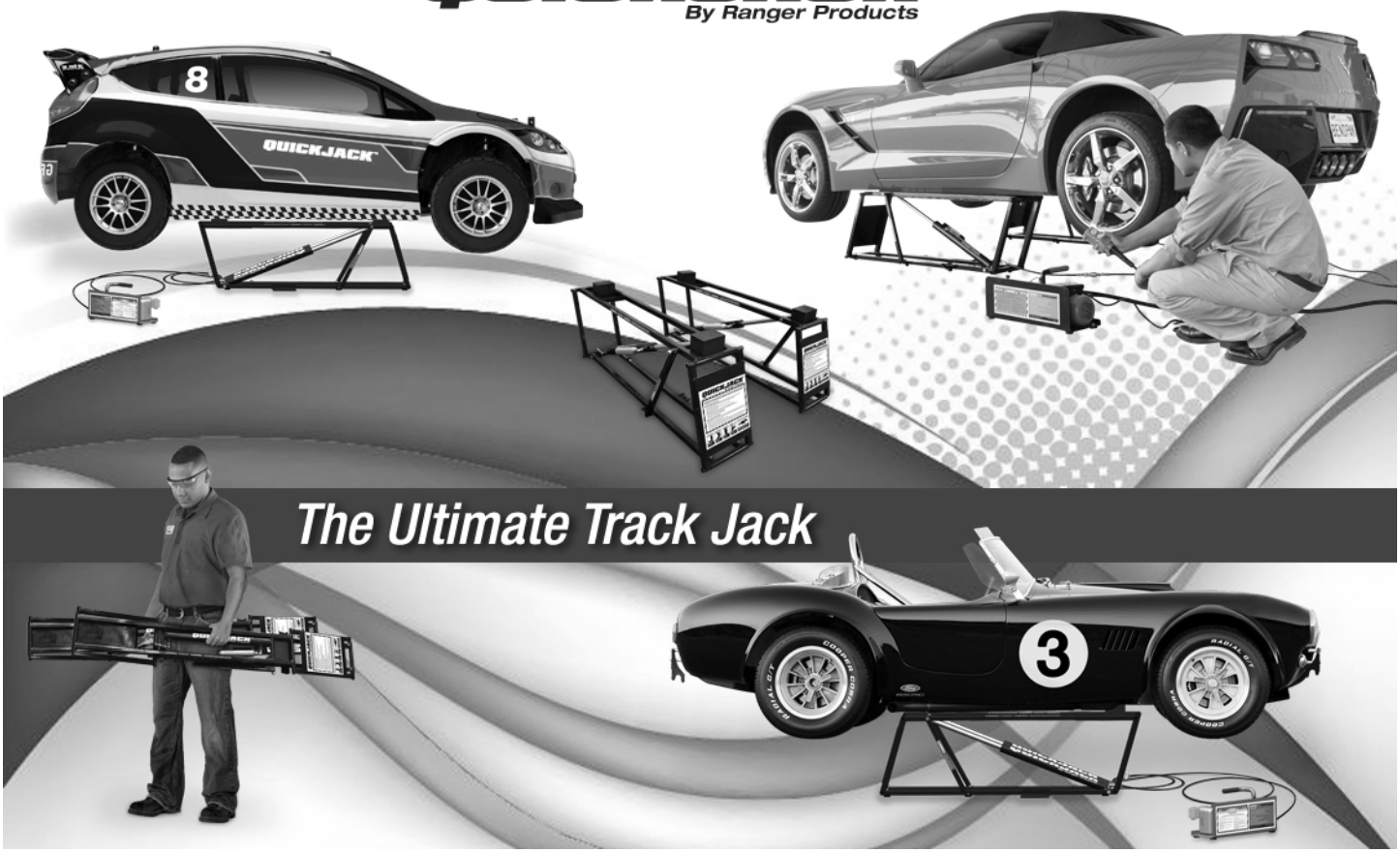

FOR PARTS OR SERVICE CONTACT:

QuickJack
1645 Lemonwood Dr.
Santa Paula, CA 93060
1-805-421-5114
Toll Free: 1-888-262-3880
www.quickjack.com
EN ESPAÑOL: www.quickjack.com.mx

P/N 5900395

NOTE:

Every effort has been taken to ensure complete and accurate instructions have been included in this manual, however, possible product updates, revisions and or changes may have occurred since this printing. Quickjack™ reserves the right to change specifications without incurring any obligation for equipment previously or subsequently sold.

QUICKJACK™
By Ranger Products